# CITY OF MERRILL

## COMMON COUNCIL

## AGENDA ● TUESDAY APRIL 9, 2019

**Regular Meeting** | **City Hall Council Chambers** | **7:00 PM**

1. Call to Order
2. Invocation by Pastor Andy Perry, Bible Presbyterian Church
3. Pledge of Allegiance
4. Roll Call
5. Public Comment Period
6. Minutes of previous Common Council meeting(s):
    1. Minutes of March 19, 2019 Common Council meeting
7. Fiscal, Room Tax & Tourism Reports:
    1. Revenue & Expense Report for Period Ending March 31, 2019
    2. 2018 Room Tax Reports
    3. 2018 Tourism Report
8. Board of Public Works:
    1. Discuss condition of Jackson Street (Eugene to Foster Street), rapid deterioration over spring break up. Possibly delay Poplar and Court Street project until 2020 and reconstruct Jackson Street in 2019. The Board of Public Works recommends approving a project to reconstruct Jackson Street, and delaying the N. Poplar Street (East Second Street East Fourth Street) Project and the N. Court Street (East Second Street to East Fifth Street) Project until 2020.
    2. Consider bids on M2019-01 East Main Street (Memorial Drive to Pine Ridge Avenue) Project. Mayor Woellner is bringing the bids directly to the Common Council.
9. Health and Safety Committee:
    1. Application from DSwan LLC, Dawn R. Swan, Agent, for a Class "B" (Beer) license for First Street Coffee Station, 809 East First Street, effective April 10th, 2019. The Health and Safety Committee recommends approval.
    2. Application from DSwann LLC, Dawn R. Swan Agent, for a Class "B" (Beer) and Class C (Wine) license for First Street Coffee Station, 501 S. Pine Ridge Avenue, effective April 10th, 2019. The Health and Safety Committee recommends approval.
    3. Change of Agent Application from Heartland Cooperative Services (Merrill Cenex), 1300 N. Center Avenue, naming Becky Guite as agent. The Health and Safety Committee recommends approval.

10. Water and Sewage Disposal Committee:

    1. Discussion on the need for Water Tower Mixers. The Water & Sewage Disposal Committee makes no recommendation.

11. Placing Committee Reports on File:

    1. Consider placing the following committee reports on file: Board of Public Works, City Plan Commission, Festival Grounds Committee, Health & Safety Committee, Merrill Enrichment Center Committee, Parks & Recreation Commission, Personnel & Finance Committee and Water & Sewage Disposal Committee.

12. Ordinances:

    1. An Ordinance amending Code of Ordinances Chapter 2, Article VI, Section 2-142, to allow the Parks and Recreation Commission to elect their representative on the City Plan Commission. The Parks and Recreation Commission and the City Plan Commission recommend approval.

    2. An Ordinance amending the District Zoning Map of the City for Lot 3 of Certified Survey Map No. 2572, to re-zone, from R-2 (Residential) to Industrial, a parcel on South Alexander Street. The City Plan Commission recommends approval.

13. Resolutions:

    None.

14. Mayor's Communications

15. Adjournment

William N. Heideman, CMC, WCMC
City Clerk

The Merrill City Hall is accessible to the physically disadvantaged. If special accommodations are needed, please contact the Merrill City Hall at (715) 536-5594.

# CITY OF MERRILL

## COMMON COUNCIL

## MINUTES • TUESDAY MARCH 19, 2019

**Regular Meeting** | **City Hall Council Chambers** | **7:00 PM**

1. Call to Order

Mayor Woellner called the meeting to order at 7:00 P.M.

| Attendee Name | Title | Status | Arrived |
|---|---|---|---|
| Paul Russell | Alderperson - First District | Present | |
| Steve Hass | Alderperson - Second District | Present | |
| Rick Blake | Alderperson - Third District | Excused | |
| Steve Osness | Alderperson - Fourth District | Present | |
| John M. Van Lieshout | Alderperson - Fifth District | Present | |
| Dave Sukow | Alderperson - Sixth District | Present | |
| Rob Norton | Alderperson - Seventh District | Present | |
| Tim Meehean | Alderperson - Eighth District | Present | |
| Derek Woellner | Mayor | Present | |

2. Silent Prayer

3. Pledge of Allegiance

4. Citizen service recognition for Matthew Kloth

Fire Chief Klug presented Matthew Kloth with several tokens of appreciation to recognize Mr. Kloth's work in removing snow and ice to allow access to several fire hydrants in the City.

5. Roll Call

6. Public Comment Period

Steve Sabatke, a member of the Merrill Recall group, explained that the group's efforts are nothing personal against anyone. Rather, the groups efforts are a result of what they see as a failure to lead Merrill in the right direction. The group has concerns with excessive taxation and spending.

7. Minutes of previous Common Council meeting(s):

   1. Minutes of February 18, 2019 Common Council meeting

   Motion (Norton/Sukow) to approve.

**RESULT:** **APPROVED**

8. Revenue & Expense Reports(s):

   1. Revenue & Expense Reports for periods ending December 31, 2018, January 31, 2019 and February 28, 2019.

   Motion (Norton/Hass) to approve.

Attachment: 2019-03-19 Council Minutes (4072 : Minutes of March 19, 2019 Common Council meeting)

| RESULT: | APPROVED |
|---|---|

9. General agenda items:

1. Employee Years of Service Recognition:

Matthew P. Waid, 10 years (Police Department)

City Clerk Heideman read a certificate of recognition for Matthew Waid, Police Chief Bennett then presented the certificate to Officer Waid.

10. Strategic Planning:

1. Discuss type and extent of citizen involvement in strategic planning process

Alderman Norton suggested that any discussion of the strategic plan update be delayed until a future meeting. Without objection, it was so ordered.

2. Discuss and determine dates, times and locations for future strategic planning meetings

This discussion was delayed (see previous agenda item).

11. Change order of agenda items:

Motion (Meehean/Norton) to change the order of agenda items in order to consider the Resolution on the Development Agreement next. Carried.

12. Resolutions:

1. A Resolution authorizing a Development Agreement by and between the City of Merrill, Wisconsin and FreMarq Innovations, Inc. (Resolution #2593). The Redevelopment Authority recommends approval.

WHEREAS, the Common Council of the City of Merrill created Tax Increment District (TID) No. 7 (North Center Ave. Area) on August 11, 2009; and,

WHEREAS, FreMarq Innovations, Inc. has proposed relocation and expansion of jobs from Wausau to the vacant former mill property at 1101 North Mill Street (within TID No. 7) for curtain wall manufacturing business, and,

WHEREAS, there will be at least fifty full-time jobs retained or newly created through this redevelopment project; and,

WHEREAS, the City of Merrill finds that the proposed development and the fulfillment of the items and conditions of the attached agreement are in the vital and best interest of the City of Merrill, Redevelopment Authority and City residents and serve a public purpose in accordance with State law; and,

WHEREAS, the City and FreMarq Innovations, Inc. have negotiated the development agreement to provide an incentive/forgivable loan payment to facilitate the manufacturing relocation; and

WHEREAS, the loan of up to $100,000 would become a TID development grant (i.e. no repayment) if fifty full-time jobs are maintained in Merrill for two years after the manufacturing relocation;

Attachment: 2019-03-19 Council Minutes (4072 : Minutes of March 19, 2019 Common Council meeting)

NOW THEREFORE, BE IT RESOLVED BY THE COMMON COUNCILOF THE CITY OF MERRILL, WISCONSIN this 19th day of March, 2019, that the Mayor and City Clerk are authorized to sign the development agreement by and between the City of Merrill and FreMarq Innovations, Inc. and to facilitate the implementation thereof.

Motion (Meehean/Van Lieshout) to approve.

| | |
|---|---|
| **RESULT:** | **APPROVED** |

13. Community Development Committee:

    1. Consider $100,000 Economic Development Loan to City of Merrill at 3% annual interest rate, not to exceed a three year-term. The Community Development Committee recommends approval.

Motion (Meehean/Norton) to approve.

| | |
|---|---|
| **RESULT:** | **APPROVED** |

14. Health and Safety Committee:

    1. Applications from the Merrill Firefighters Charities for three temporary Class "B" (picnic) licenses to sell fermented malt beverages at Ott's Park in conjunction with the Merrill Firefighters Charities Softball Tournament, August 2 - August 4, 2019. The Health and Safety Committee recommends approval.

Motion (Sukow/Hass) to approve.

| | |
|---|---|
| **RESULT:** | **APPROVED** |

15. Placing Committee Reports on File:

    1. Consider placing the following committee reports on file: Airport Commission, Board of Public Works, Community Development Committee, Health & Safety Committee, Library Board, Parks & Recreation Commission, Transit Commission and Water & Sewage Disposal Committee.

Motion (Meehean/Van Lieshout) to place on file.

| | |
|---|---|
| **RESULT:** | **PLACED ON FILE** |

16. Ordinances:

    1. None.

17. Resolutions (continued):

    1. A Resolution on governmental responsibility for Runoff Management Grants (Resolution #2594).

Attachment: 2019-03-19 Council Minutes (4072 : Minutes of March 19, 2019 Common Council meeting)

WHEREAS, the City of Merrill is interested in acquiring a Grant from the Wisconsin Department of Natural Resources for the purpose of implementing measures to control agricultural or urban storm water runoff pollution sources (as described in the application and pursuant to §281.65 or 281.66, Wis. Stats., and chs. NR 151, 153, and 155); and,

WHEREAS, a cost-sharing grant is required to carry out the project; and,

NOW THEREFORE, BE IT RESOLVED BY THE COMMON COUNCIL OF THE CITY OF MERRILL, WISCONSIN this 19th day of March, 2019, that the Common Council, hereby approves and authorizes Rod Akey, Public Works Director/City Engineer, who oversees and manages the City of Merrill Public Works Department to act on behalf of the City of Merrill to:

Sign and submit an application to the State of Wisconsin Department of Natural Resources for any financial aid that may be available.

Sign a grant agreement between the local government (applicant) and the Department of Natural Resources;

Sign and submit reimbursement claims along with necessary supporting documentation;

Sign and submit interim and final reports and other documentation as required by the grant agreement;

Sign and submit an Environmental Hazards Assessment Form, if required; and

Take necessary action to undertake, direct and complete the approved project.

BE IT FURTHER RESOLVED, that the City of Merrill shall comply with all state and federal laws, regulations and permit requirements pertaining to implementation of this project and to fulfillment of the grant document provisions.

Motion (Norton/Meehean) to approve.

| | |
|---|---|
| **RESULT:** | **APPROVED** |

## 18. Mayor's Communications

Mayor Woellner reminded everyone that, for the April 2nd election, voters who normally vote at the T.B. Scott Library (Aldermanic District #3 and Aldermanic District #6) will instead vote in the City Hall Common Council Chambers. The Common Council approved this change due to water damage at the library.

## 19. Adjournment

Motion (Norton/Russell) to adjourn. Carried. Adjourned at 7:26 P.M.

Attachment: 2019-03-19 Council Minutes (4072 : Minutes of March 19, 2019 Common Council meeting)

Derek R. Woellner
Mayor

William N. Heideman, CMC, WCMC
City Clerk

I, William N. Heideman, City Clerk of the City of Merrill, Wisconsin, do hereby certify that the Mayor approved the above action of the Common Council on March 25, 2019

William N. Heideman, CMC, WCMC
City Clerk

Attachment: 2019-03-19 Council Minutes (4072 : Minutes of March 19, 2019 Common Council meeting)

# City of Merrill

Kathy Unertl, Finance Director
1004 East 1st Street • Merrill, Wisconsin • 54452
Phone: 715.536.5594 • Fax: 715.539.2668
e-mail: Kathy.Unertl@ci.merrill.wi.us


Date: April 3rd, 2019

To: Mayor Derek Woellner
Alderpersons

From: Kathy Unertl, Finance Director

RE: March 2019 Revenue & Expense Reports

**Revenues – General Fund:**

Consistent with budgeted amounts. Interest income at River Valley/Incredible Bank is at 1.97% which is much higher than projected budget rate. City has already received $21,600 in Interest Income (with 2019 budgeted level of $20,000).

Following CLA audit calculation, Water Utility PILOT (Payment in lieu of taxes) for 2018 was about $12,000 higher than 2017.

These additional revenues will offset the increased Snow & Ice expenses.

**Expenses – General Fund:**

Expenditures are consistent with budgeted amounts. Major exception:

Streets – Snow & Ice Overtime: March 2019 was $20,640 (with total annual budget of $20,000). In addition, diesel fuel expenses for 2019 are higher than normal winter expense.

**Fund 30 – Debt Service:**

Debt Service Interest was paid on four General Obligations bonds – due 4/1st. Detail on Revenues and Expenses is provided.

Attachment: Revenue & Expense - March 2019 (4075 : Revenue & Expense Report for Period Ending March 31, 2019)

REVENUE & EXPENSE REPORT (UNAUDITED)

AS OF: MARCH 31ST, 2019

10 -General Fund

| SUMMARY | ANNUAL BUDGET | CURRENT PERIOD | Y-T-D ACTUAL | % OF BUDGET | BUDGET BALANCE |
|---|---|---|---|---|---|
| **REVENUES** | | | | | |
| ======== | | | | | |
| **Non-Departmental** | | | | | |
| Taxes (or Utility Rev.) | 4,525,436.00 | 465,268.56 | 4,428,591.74 | 97.86 | 96,844.26 |
| Intergovernmental | 4,191,700.65 | 0.00 | 206,106.06 | 4.92 | 3,985,594.59 |
| Licenses and Permits | 39,021.00 | 1,405.00 | 3,310.00 | 8.48 | 35,711.00 |
| Fines, Forfeits, & Pen. | 117,500.00 | 18,328.99 | 40,008.51 | 34.05 | 77,491.49 |
| Public Charges-Services | 7,625.00 | 533.50 | 1,238.92 | 16.25 | 6,386.08 |
| Miscellaneous Revenues | 109,150.00 | 13,981.36 | 51,313.69 | 47.01 | 57,836.31 |
| TOTAL Non-Departmental | 8,990,432.65 | 499,517.41 | 4,730,568.92 | 52.62 | 4,259,863.73 |
| **Municipal Court** | | | | | |
| Intergov Charges (Misc.) | 7,950.00 | 825.00 | 1,320.00 | 16.60 | 6,630.00 |
| TOTAL Municipal Court | 7,950.00 | 825.00 | 1,320.00 | 16.60 | 6,630.00 |
| **City Attorney** | | | | | |
| Intergov Charges (Misc.) | 10,500.00 | 2,835.50 | 2,835.50 | 27.00 | 7,664.50 |
| Miscellaneous Revenues | 15,000.00 | 0.00 | 0.00 | 0.00 | 15,000.00 |
| TOTAL City Attorney | 25,500.00 | 2,835.50 | 2,835.50 | 11.12 | 22,664.50 |
| **City Administrator** | | | | | |
| Miscellaneous Revenues | 27,500.00 | 0.00 | 0.00 | 0.00 | 27,500.00 |
| TOTAL City Administrator | 27,500.00 | 0.00 | 0.00 | 0.00 | 27,500.00 |
| **Clerk/Treasurer Staff** | | | | | |
| Miscellaneous Revenues | 2,500.00 | 0.00 | 0.00 | 0.00 | 2,500.00 |
| TOTAL Clerk/Treasurer Staff | 2,500.00 | 0.00 | 0.00 | 0.00 | 2,500.00 |
| **Treasurer/Finance Dir.** | | | | | |
| Licenses and Permits | 500.00 | 356.74 | 381.74 | 76.35 | 118.26 |
| Miscellaneous Revenues | 27,500.00 | 0.00 | 0.00 | 0.00 | 27,500.00 |
| TOTAL Treasurer/Finance Dir. | 28,000.00 | 356.74 | 381.74 | 1.36 | 27,618.26 |
| **Over-Collected Taxes** | | | | | |
| Miscellaneous Revenues | 1,500.00 | 0.00 | 898.01 | 59.87 | 601.99 |
| TOTAL Over-Collected Taxes | 1,500.00 | 0.00 | 898.01 | 59.87 | 601.99 |
| **Police** | | | | | |
| Intergovernmental | 15,700.00 | 4,000.00 | 4,000.00 | 25.48 | 11,700.00 |
| Public Charges-Services | 8,025.00 | 605.00 | 1,346.25 | 16.78 | 6,678.75 |
| Intergov Charges (Misc.) | 8,500.00 | 0.00 | 7,294.76 | 85.82 | 1,205.24 |
| Miscellaneous Revenues | 0.00 | 0.00 | 0.00 | 0.00 | 0.00 |
| TOTAL Police | 32,225.00 | 4,605.00 | 12,641.01 | 39.23 | 19,583.99 |

Attachment: Revenue & Expense - March 2019 (4075 : Revenue & Expense Report for Period Ending March 31, 2019)

REVENUE & EXPENSE REPORT (UNAUDITED)

AS OF: MARCH 31ST, 2019

10 -General Fund

| SUMMARY | ANNUAL BUDGET | CURRENT PERIOD | Y-T-D ACTUAL | % OF BUDGET | BUDGET BALANCE |
|---|---|---|---|---|---|
| **Traffic Control** | | | | | |
| Miscellaneous Revenues | 0.00 | 0.00 | 0.00 | 0.00 | 0.00 |
| TOTAL Traffic Control | 0.00 | 0.00 | 0.00 | 0.00 | 0.00 |
| **Fire Protection** | | | | | |
| Public Charges-Services | 7,025.00 | 280.00 | 1,345.00 | 19.15 | 5,680.00 |
| Intergov Charges (Misc.) | 217,548.00 | 0.00 | 108,773.82 | 50.00 | 108,774.18 |
| Miscellaneous Revenues | 0.00 | 0.00 | 0.00 | 0.00 | 0.00 |
| TOTAL Fire Protection | 224,573.00 | 280.00 | 110,118.82 | 49.03 | 114,454.18 |
| **Ambulance/EMS** | | | | | |
| Intergovernmental | 1,059,247.00 | 71,245.87 | 159,730.37 | 15.08 | 899,516.63 |
| TOTAL Ambulance/EMS | 1,059,247.00 | 71,245.87 | 159,730.37 | 15.08 | 899,516.63 |
| **Bldg. Inspection/Zoning** | | | | | |
| Licenses and Permits | 32,500.00 | 795.00 | 1,650.00 | 5.08 | 30,850.00 |
| Miscellaneous Revenues | 10,000.00 | 0.00 | 0.00 | 0.00 | 10,000.00 |
| TOTAL Bldg. Inspection/Zoning | 42,500.00 | 795.00 | 1,650.00 | 3.88 | 40,850.00 |
| **Public Works/Engineer** | | | | | |
| Miscellaneous Revenues | 67,500.00 | 0.00 | 0.00 | 0.00 | 67,500.00 |
| TOTAL Public Works/Engineer | 67,500.00 | 0.00 | 0.00 | 0.00 | 67,500.00 |
| **Garage Maintenance** | | | | | |
| Miscellaneous Revenues | 0.00 | 0.00 | 0.00 | 0.00 | 0.00 |
| TOTAL Garage Maintenance | 0.00 | 0.00 | 0.00 | 0.00 | 0.00 |
| **Operations Support (M&E)** | | | | | |
| Intergovernmental | 320,500.00 | 21,642.56 | 58,854.14 | 18.36 | 261,645.86 |
| TOTAL Operations Support (M&E) | 320,500.00 | 21,642.56 | 58,854.14 | 18.36 | 261,645.86 |
| **Roads** | | | | | |
| Intergovernmental | 78,000.00 | 2,063.79 | 4,755.97 | 6.10 | 73,244.03 |
| Public Charges-Services | 2,500.00 | 0.00 | 0.00 | 0.00 | 2,500.00 |
| Miscellaneous Revenues | 0.00 | 0.00 | 2,732.73 | 0.00 | ( 2,732.73) |
| TOTAL Roads | 80,500.00 | 2,063.79 | 7,488.70 | 9.30 | 73,011.30 |
| **Snow and Ice** | | | | | |
| Public Charges-Services | 10,000.00 | 2,000.00 | 2,000.00 | 20.00 | 8,000.00 |
| TOTAL Snow and Ice | 10,000.00 | 2,000.00 | 2,000.00 | 20.00 | 8,000.00 |
| **Stormwater Maintenance** | | | | | |
| Intergovernmental | 0.00 | 0.00 | 0.00 | 0.00 | 0.00 |
| Miscellaneous Revenues | 0.00 | 0.00 | 0.00 | 0.00 | 0.00 |
| TOTAL Stormwater Maintenance | 0.00 | 0.00 | 0.00 | 0.00 | 0.00 |

Attachment: Revenue & Expense - March 2019 (4075 : Revenue & Expense Report for Period Ending March 31, 2019)

REVENUE & EXPENSE REPORT (UNAUDITED)

AS OF: MARCH 31ST, 2019

10 -General Fund

| SUMMARY | ANNUAL BUDGET | CURRENT PERIOD | Y-T-D ACTUAL | % OF BUDGET | BUDGET BALANCE |
|---|---|---|---|---|---|
| **Street Painting-Marking** | | | | | |
| Intergovernmental | 0.00 | 0.00 | 0.00 | 0.00 | 0.00 |
| TOTAL Street Painting-Marking | 0.00 | 0.00 | 0.00 | 0.00 | 0.00 |
| **Street Lighting** | | | | | |
| Miscellaneous Revenues | 0.00 | 0.00 | 0.00 | 0.00 | 0.00 |
| TOTAL Street Lighting | 0.00 | 0.00 | 0.00 | 0.00 | 0.00 |
| **Stormwater Plan/Const.** | | | | | |
| Licenses and Permits | 750.00 | 0.00 | 0.00 | 0.00 | 750.00 |
| TOTAL Stormwater Plan/Const. | 750.00 | 0.00 | 0.00 | 0.00 | 750.00 |
| **Airport** | | | | | |
| Public Charges-Services | 25,000.00 | 2,160.00 | 14,520.86 | 58.08 | 10,479.14 |
| Miscellaneous Revenues | 0.00 | 0.00 | 0.00 | 0.00 | 0.00 |
| TOTAL Airport | 25,000.00 | 2,160.00 | 14,520.86 | 58.08 | 10,479.14 |
| **Transit** | | | | | |
| Specials (Utility Rev.) | 242,500.00 | 0.00 | 72,640.33 | 29.95 | 169,859.67 |
| Intergovernmental | 82,500.00 | 0.00 | 0.00 | 0.00 | 82,500.00 |
| Public Charges-Services | 143,250.00 | 10,681.55 | 31,999.15 | 22.34 | 111,250.85 |
| Miscellaneous Revenues | 24,000.00 | 3,514.00 | 3,514.00 | 14.64 | 20,486.00 |
| TOTAL Transit | 492,250.00 | 14,195.55 | 108,153.48 | 21.97 | 384,096.52 |
| **Garbage Collection** | | | | | |
| Miscellaneous Revenues | 6,000.00 | 2,310.59 | 7,078.49 | 117.97 | ( 1,078.49) |
| TOTAL Garbage Collection | 6,000.00 | 2,310.59 | 7,078.49 | 117.97 | ( 1,078.49) |
| **Recycling** | | | | | |
| Intergovernmental | 32,500.00 | 0.00 | 0.00 | 0.00 | 32,500.00 |
| Miscellaneous Revenues | 8,000.00 | 515.00 | 1,270.00 | 15.88 | 6,730.00 |
| TOTAL Recycling | 40,500.00 | 515.00 | 1,270.00 | 3.14 | 39,230.00 |
| **Weed & Nuisance Control** | | | | | |
| Public Charges-Services | 5,000.00 | 0.00 | 0.00 | 0.00 | 5,000.00 |
| Miscellaneous Revenues | 1,000.00 | 0.00 | 0.00 | 0.00 | 1,000.00 |
| TOTAL Weed & Nuisance Control | 6,000.00 | 0.00 | 0.00 | 0.00 | 6,000.00 |
| **MEC - Enrichment** | | | | | |
| Public Charges-Services | 7,500.00 | 0.00 | 0.00 | 0.00 | 7,500.00 |
| TOTAL MEC - Enrichment | 7,500.00 | 0.00 | 0.00 | 0.00 | 7,500.00 |
| **Library** | | | | | |
| Intergovernmental | 449,305.00 | 224,652.50 | 224,652.50 | 50.00 | 224,652.50 |
| Public Charges-Services | 16,000.00 | 393.34 | 2,224.26 | 13.90 | 13,775.74 |
| Miscellaneous Revenues | 0.00 | 1,094.37 | 1,814.37 | 0.00 | ( 1,814.37) |
| TOTAL Library | 465,305.00 | 226,140.21 | 228,691.13 | 49.15 | 236,613.87 |

Attachment: Revenue & Expense - March 2019 (4075 : Revenue & Expense Report for Period Ending March 31, 2019)

REVENUE & EXPENSE REPORT (UNAUDITED)

AS OF: MARCH 31ST, 2019

10 -General Fund

| SUMMARY | ANNUAL BUDGET | CURRENT PERIOD | Y-T-D ACTUAL | % OF BUDGET | BUDGET BALANCE |
|---|---|---|---|---|---|
| **Parks** | | | | | |
| Public Charges-Services | 12,500.00 | 476.05 | 3,461.02 | 27.69 | 9,038.98 |
| Miscellaneous Revenues | 0.00 | 0.00 | 0.00 | 0.00 | 0.00 |
| TOTAL Parks | 12,500.00 | 476.05 | 3,461.02 | 27.69 | 9,038.98 |
| **River Bend Trail** | | | | | |
| Miscellaneous Revenues | 0.00 | 0.00 | 0.00 | 0.00 | 0.00 |
| TOTAL River Bend Trail | 0.00 | 0.00 | 0.00 | 0.00 | 0.00 |
| **Recreation Programs** | | | | | |
| Public Charges-Services | 96,000.00 | 19,240.00 | 20,005.00 | 20.84 | 75,995.00 |
| TOTAL Recreation Programs | 96,000.00 | 19,240.00 | 20,005.00 | 20.84 | 75,995.00 |
| **Decorations & Banners** | | | | | |
| Miscellaneous Revenues | 0.00 | 0.00 | 0.00 | 0.00 | 0.00 |
| TOTAL Decorations & Banners | 0.00 | 0.00 | 0.00 | 0.00 | 0.00 |
| **Outside Agencies** | | | | | |
| Miscellaneous Revenues | 0.00 | 0.00 | 0.00 | 0.00 | 0.00 |
| TOTAL Outside Agencies | 0.00 | 0.00 | 0.00 | 0.00 | 0.00 |
| **Cable Franchise Adm** | | | | | |
| Licenses and Permits | 6,000.00 | 0.00 | 0.00 | 0.00 | 6,000.00 |
| TOTAL Cable Franchise Adm | 6,000.00 | 0.00 | 0.00 | 0.00 | 6,000.00 |
| **MARC - Smith Center** | | | | | |
| Public Charges-Services | 65,900.00 | 22,785.56 | 27,758.06 | 42.12 | 38,141.94 |
| Miscellaneous Revenues | 0.00 | 0.00 | 0.00 | 0.00 | 0.00 |
| TOTAL MARC - Smith Center | 65,900.00 | 22,785.56 | 27,758.06 | 42.12 | 38,141.94 |
| **Aquatic Center** | | | | | |
| Public Charges-Services | 105,000.00 | 1,885.00 | 2,300.00 | 2.19 | 102,700.00 |
| TOTAL Aquatic Center | 105,000.00 | 1,885.00 | 2,300.00 | 2.19 | 102,700.00 |
| TOTAL REVENUE | 12,249,132.65 | 895,874.83 | 5,501,725.25 | 44.92 | 6,747,407.40 |
| EXPENDITURES | | | | | |
| **Common Council** | | | | | |
| Personnel Services | 34,200.00 | 2,234.54 | 7,096.36 | 20.75 | 27,103.64 |
| Contractual Services | 4,890.00 | 254.70 | 298.20 | 6.10 | 4,591.80 |
| Supplies & Expenses | 11,185.00 | 0.00 | 2,160.46 | 19.32 | 9,024.54 |
| TOTAL Common Council | 50,275.00 | 2,489.24 | 9,555.02 | 19.01 | 40,719.98 |

Attachment: Revenue & Expense - March 2019 (4075 : Revenue & Expense Report for Period Ending March 31, 2019)

REVENUE & EXPENSE REPORT (UNAUDITED)

AS OF: MARCH 31ST, 2019

10 -General Fund

| SUMMARY | ANNUAL BUDGET | CURRENT PERIOD | Y-T-D ACTUAL | % OF BUDGET | BUDGET BALANCE |
|---|---|---|---|---|---|
| **Municipal Court** | | | | | |
| Personnel Services | 85,944.00 | 6,628.23 | 19,884.67 | 23.14 | 66,059.33 |
| Contractual Services | 500.00 | 0.00 | 0.00 | 0.00 | 500.00 |
| Supplies & Expenses | 5,000.00 | ( 91.40) | 905.27 | 18.11 | 4,094.73 |
| Capital Outlay | 500.00 | 0.00 | 0.00 | 0.00 | 500.00 |
| Technology | 5,550.00 | 0.00 | 5,586.00 | 100.65 | ( 36.00) |
| TOTAL Municipal Court | 97,494.00 | 6,536.83 | 26,375.94 | 27.05 | 71,118.06 |
| **City Attorney** | | | | | |
| Personnel Services | 225,326.00 | 17,353.87 | 51,981.29 | 23.07 | 173,344.71 |
| Contractual Services | 3,700.00 | 360.00 | 6,560.00 | 177.30 | ( 2,860.00) |
| Supplies & Expenses | 7,075.00 | 464.71 | 567.15 | 8.02 | 6,507.85 |
| TOTAL City Attorney | 236,101.00 | 18,178.58 | 59,108.44 | 25.04 | 176,992.56 |
| **Mayor** | | | | | |
| Personnel Services | 13,780.00 | 1,043.40 | 3,130.20 | 22.72 | 10,649.80 |
| Supplies & Expenses | 825.00 | 35.00 | 245.10 | 29.71 | 579.90 |
| TOTAL Mayor | 14,605.00 | 1,078.40 | 3,375.30 | 23.11 | 11,229.70 |
| **City Administrator** | | | | | |
| Personnel Services | 119,907.00 | 9,079.72 | 27,239.16 | 22.72 | 92,667.84 |
| Contractual Services | 675.00 | 56.73 | 170.19 | 25.21 | 504.81 |
| Supplies & Expenses | 850.00 | 0.00 | 0.00 | 0.00 | 850.00 |
| TOTAL City Administrator | 121,432.00 | 9,136.45 | 27,409.35 | 22.57 | 94,022.65 |
| **Personnel - HR** | | | | | |
| Contractual Services | 4,350.00 | 398.05 | 790.60 | 18.17 | 3,559.40 |
| Supplies & Expenses | 500.00 | 0.00 | 0.00 | 0.00 | 500.00 |
| TOTAL Personnel - HR | 4,850.00 | 398.05 | 790.60 | 16.30 | 4,059.40 |
| **City Clerk** | | | | | |
| Personnel Services | 77,986.00 | 6,014.04 | 18,042.12 | 23.14 | 59,943.88 |
| Supplies & Expenses | 4,550.00 | 638.94 | 821.77 | 18.06 | 3,728.23 |
| Technology | 4,500.00 | 4,465.12 | 4,465.12 | 99.22 | 34.88 |
| TOTAL City Clerk | 87,036.00 | 11,118.10 | 23,329.01 | 26.80 | 63,706.99 |
| **Clerk/Treasurer Staff** | | | | | |
| Personnel Services | 172,383.00 | 13,746.47 | 42,496.68 | 24.65 | 129,886.32 |
| Supplies & Expenses | 1,100.00 | 121.91 | 305.43 | 27.77 | 794.57 |
| Technology | 0.00 | 0.00 | 0.00 | 0.00 | 0.00 |
| TOTAL Clerk/Treasurer Staff | 173,483.00 | 13,868.38 | 42,802.11 | 24.67 | 130,680.89 |
| **Elections - AVERAGED** | | | | | |
| Personnel Services | 25,250.00 | 0.00 | 0.00 | 0.00 | 25,250.00 |
| Contractual Services | 13,000.00 | 0.00 | 0.00 | 0.00 | 13,000.00 |
| Supplies & Expenses | 1,525.00 | 0.00 | 0.00 | 0.00 | 1,525.00 |
| TOTAL Elections - AVERAGED | 39,775.00 | 0.00 | 0.00 | 0.00 | 39,775.00 |

Attachment: Revenue & Expense - March 2019 (4075 : Revenue & Expense Report for Period Ending March 31, 2019)

REVENUE & EXPENSE REPORT (UNAUDITED)

AS OF: MARCH 31ST, 2019

10 -General Fund

| SUMMARY | ANNUAL BUDGET | CURRENT PERIOD | Y-T-D ACTUAL | % OF BUDGET | BUDGET BALANCE |
|---|---|---|---|---|---|
| **Treasurer/Finance Dir.** | | | | | |
| Personnel Services | 107,041.00 | 8,192.20 | 24,576.58 | 22.96 | 82,464.42 |
| Contractual Services | 6,000.00 | 157.52 | 484.51 | 8.08 | 5,515.49 |
| Supplies & Expenses | 25,150.00 | 1,949.01 | 10,444.33 | 41.53 | 14,705.67 |
| Capital Outlay | 0.00 | 0.00 | 881.52 | 0.00 | ( 881.52) |
| TOTAL Treasurer/Finance Dir. | 138,191.00 | 10,298.73 | 36,386.94 | 26.33 | 101,804.06 |
| **Information Technology** | | | | | |
| Personnel Services | 72,000.00 | 5,827.88 | 16,882.84 | 23.45 | 55,117.16 |
| Technology | 132,250.00 | 7,934.25 | 32,730.93 | 24.75 | 99,519.07 |
| TOTAL Information Technology | 204,250.00 | 13,762.13 | 49,613.77 | 24.29 | 154,636.23 |
| **Assessment of Property** | | | | | |
| Contractual Services | 28,425.00 | 0.00 | 6,550.00 | 23.04 | 21,875.00 |
| Supplies & Expenses | 100.00 | 0.00 | 0.00 | 0.00 | 100.00 |
| TOTAL Assessment of Property | 28,525.00 | 0.00 | 6,550.00 | 22.96 | 21,975.00 |
| **Independent Auditing** | | | | | |
| Contractual Services | 15,500.00 | 0.00 | 2,518.07 | 16.25 | 12,981.93 |
| Technology | 1,250.00 | 0.00 | 0.00 | 0.00 | 1,250.00 |
| TOTAL Independent Auditing | 16,750.00 | 0.00 | 2,518.07 | 15.03 | 14,231.93 |
| **City Maintenance** | | | | | |
| Personnel Services | 128,910.00 | 10,579.04 | 28,437.42 | 22.06 | 100,472.58 |
| Contractual Services | 68,900.00 | 5,593.25 | 16,899.13 | 24.53 | 52,000.87 |
| Supplies & Expenses | 16,900.00 | 1,366.51 | 2,116.43 | 12.52 | 14,783.57 |
| Capital Outlay | 7,000.00 | 1,115.06 | 1,467.64 | 20.97 | 5,532.36 |
| Technology | 0.00 | 0.00 | 0.00 | 0.00 | 0.00 |
| TOTAL City Maintenance | 221,710.00 | 18,653.86 | 48,920.62 | 22.07 | 172,789.38 |
| **City Maint-Library** | | | | | |
| Personnel Services | 0.00 | 0.00 | 0.00 | 0.00 | 0.00 |
| Supplies & Expenses | 0.00 | 0.00 | 0.00 | 0.00 | 0.00 |
| TOTAL City Maint-Library | 0.00 | 0.00 | 0.00 | 0.00 | 0.00 |
| **City Maint-Fire Station** | | | | | |
| Personnel Services | 0.00 | 0.00 | 27.59 | 0.00 | ( 27.59) |
| TOTAL City Maint-Fire Station | 0.00 | 0.00 | 27.59 | 0.00 | ( 27.59) |
| **Over-Collected Taxes** | | | | | |
| Supplies & Expenses | 350.00 | 0.00 | 0.00 | 0.00 | 350.00 |
| TOTAL Over-Collected Taxes | 350.00 | 0.00 | 0.00 | 0.00 | 350.00 |
| **Insurance/Employee** | | | | | |
| Personnel Services | 0.00 | 0.00 | 0.00 | 0.00 | 0.00 |
| Fixed Charges | 321,000.00 | 128,169.73 | 138,244.41 | 43.07 | 182,755.59 |
| TOTAL Insurance/Employee | 321,000.00 | 128,169.73 | 138,244.41 | 43.07 | 182,755.59 |

Attachment: Revenue & Expense - March 2019 (4075 : Revenue & Expense Report for Period Ending March 31, 2019)

REVENUE & EXPENSE REPORT (UNAUDITED)

AS OF: MARCH 31ST, 2019

10 -General Fund

| SUMMARY | ANNUAL BUDGET | CURRENT PERIOD | Y-T-D ACTUAL | % OF BUDGET | BUDGET BALANCE |
|---|---|---|---|---|---|
| **Police** | | | | | |
| Personnel Services | 2,352,263.00 | 168,952.79 | 531,428.85 | 22.59 | 1,820,834.15 |
| Contractual Services | 49,900.00 | 927.07 | 33,407.69 | 66.95 | 16,492.31 |
| Supplies & Expenses | 63,100.00 | 4,016.12 | 9,551.06 | 15.14 | 53,548.94 |
| Capital Outlay | 11,000.00 | 0.00 | 0.00 | 0.00 | 11,000.00 |
| Technology | 13,000.00 | 541.51 | 2,660.64 | 20.47 | 10,339.36 |
| TOTAL Police | 2,489,263.00 | 174,437.49 | 577,048.24 | 23.18 | 1,912,214.76 |
| **Traffic Control** | | | | | |
| Personnel Services | 12,095.00 | 132.95 | 735.24 | 6.08 | 11,359.76 |
| Supplies & Expenses | 18,750.00 | 2,480.64 | 3,073.10 | 16.39 | 15,676.90 |
| TOTAL Traffic Control | 30,845.00 | 2,613.59 | 3,808.34 | 12.35 | 27,036.66 |
| **Fire Protection** | | | | | |
| Personnel Services | 1,449,451.00 | 99,257.44 | 322,510.52 | 22.25 | 1,126,940.48 |
| Contractual Services | 27,250.00 | 2,084.75 | 6,935.45 | 25.45 | 20,314.55 |
| Supplies & Expenses | 54,000.00 | 11,008.04 | 18,272.39 | 33.84 | 35,727.61 |
| Capital Outlay | 0.00 | 0.00 | 0.00 | 0.00 | 0.00 |
| Technology | 6,500.00 | 346.04 | 692.08 | 10.65 | 5,807.92 |
| TOTAL Fire Protection | 1,537,201.00 | 112,696.27 | 348,410.44 | 22.67 | 1,188,790.56 |
| **Fire Protection-Hydrants** | | | | | |
| Contractual Services | 125,160.00 | 0.00 | 31,290.00 | 25.00 | 93,870.00 |
| TOTAL Fire Protection-Hydrants | 125,160.00 | 0.00 | 31,290.00 | 25.00 | 93,870.00 |
| **Ambulance/EMS** | | | | | |
| Personnel Services | 947,497.00 | 73,128.75 | 223,990.53 | 23.64 | 723,506.47 |
| Contractual Services | 27,250.00 | 2,084.75 | 6,927.50 | 25.42 | 20,322.50 |
| Supplies & Expenses | 79,500.00 | 9,798.60 | 13,478.40 | 16.95 | 66,021.60 |
| Technology | 5,000.00 | 346.04 | 692.08 | 13.84 | 4,307.92 |
| TOTAL Ambulance/EMS | 1,059,247.00 | 85,358.14 | 245,088.51 | 23.14 | 814,158.49 |
| **Bldg. Inspection/Zoning** | | | | | |
| Personnel Services | 142,181.00 | 10,726.60 | 32,191.29 | 22.64 | 109,989.71 |
| Contractual Services | 1,650.00 | 9.06 | 26.62 | 1.61 | 1,623.38 |
| Supplies & Expenses | 4,830.00 | 38.75 | 699.12 | 14.47 | 4,130.88 |
| Technology | 0.00 | 0.00 | 0.00 | 0.00 | 0.00 |
| TOTAL Bldg. Inspection/Zoning | 148,661.00 | 10,774.41 | 32,917.03 | 22.14 | 115,743.97 |
| **City Sealer** | | | | | |
| Contractual Services | 4,800.00 | 0.00 | 0.00 | 0.00 | 4,800.00 |
| TOTAL City Sealer | 4,800.00 | 0.00 | 0.00 | 0.00 | 4,800.00 |
| **Public Works/Engineer** | | | | | |
| Personnel Services | 108,087.00 | 5,573.77 | 16,638.17 | 15.39 | 91,448.83 |
| Contractual Services | 1,500.00 | 0.00 | 0.00 | 0.00 | 1,500.00 |
| Supplies & Expenses | 2,250.00 | 26.27 | 26.27 | 1.17 | 2,223.73 |
| Technology | 1,000.00 | 0.00 | 0.00 | 0.00 | 1,000.00 |
| TOTAL Public Works/Engineer | 112,837.00 | 5,600.04 | 16,664.44 | 14.77 | 96,172.56 |

Attachment: Revenue & Expense - March 2019 (4075 : Revenue & Expense Report for Period Ending March 31, 2019)

REVENUE & EXPENSE REPORT (UNAUDITED)

AS OF: MARCH 31ST, 2019

10 -General Fund

| SUMMARY | ANNUAL BUDGET | CURRENT PERIOD | Y-T-D ACTUAL | % OF BUDGET | BUDGET BALANCE |
|---|---|---|---|---|---|
| **Street Commissioner** | | | | | |
| Personnel Services | 2,690.00 | 207.02 | 621.06 | 23.09 | 2,068.94 |
| Contractual Services | 250.00 | 18.02 | 51.60 | 20.64 | 198.40 |
| Supplies & Expenses | 810.00 | 0.00 | 0.00 | 0.00 | 810.00 |
| TOTAL Street Commissioner | 3,750.00 | 225.04 | 672.66 | 17.94 | 3,077.34 |
| **Street Superintendent** | | | | | |
| Personnel Services | 85,500.00 | 6,274.80 | 18,824.40 | 22.02 | 66,675.60 |
| Supplies & Expenses | 1,600.00 | 30.00 | 651.99 | 40.75 | 948.01 |
| Technology | 0.00 | 0.00 | 0.00 | 0.00 | 0.00 |
| TOTAL Street Superintendent | 87,100.00 | 6,304.80 | 19,476.39 | 22.36 | 67,623.61 |
| **Garage Maintenance** | | | | | |
| Personnel Services | 820.00 | 0.00 | 91.99 | 11.22 | 728.01 |
| Contractual Services | 34,000.00 | 3,672.59 | 10,245.00 | 30.13 | 23,755.00 |
| Supplies & Expenses | 12,500.00 | 719.76 | 2,349.02 | 18.79 | 10,150.98 |
| Capital Outlay | 0.00 | 0.00 | 0.00 | 0.00 | 0.00 |
| TOTAL Garage Maintenance | 47,320.00 | 4,392.35 | 12,686.01 | 26.81 | 34,633.99 |
| **Operations Support (M&E)** | | | | | |
| Personnel Services | 197,375.00 | 13,169.42 | 40,070.91 | 20.30 | 157,304.09 |
| Contractual Services | 3,250.00 | 3,024.00 | 3,024.00 | 93.05 | 226.00 |
| Supplies & Expenses | 376,850.00 | 48,324.39 | 65,093.13 | 17.27 | 311,756.87 |
| Technology | 575.00 | 0.00 | 0.00 | 0.00 | 575.00 |
| TOTAL Operations Support (M&E) | 578,050.00 | 64,517.81 | 108,188.04 | 18.72 | 469,861.96 |
| **Roads** | | | | | |
| Personnel Services | 241,877.00 | 2,487.49 | 31,108.74 | 12.86 | 210,768.26 |
| Supplies & Expenses | 91,000.00 | 1,975.05 | 2,354.41 | 2.59 | 88,645.59 |
| TOTAL Roads | 332,877.00 | 4,462.54 | 33,463.15 | 10.05 | 299,413.85 |
| **Street Cleaning** | | | | | |
| Personnel Services | 40,872.00 | 1.48 | 983.89 | 2.41 | 39,888.11 |
| Supplies & Expenses | 1,250.00 | 0.00 | 109.06 | 8.72 | 1,140.94 |
| TOTAL Street Cleaning | 42,122.00 | 1.48 | 1,092.95 | 2.59 | 41,029.05 |
| **Snow and Ice** | | | | | |
| Personnel Services | 202,808.00 | 78,235.26 | 152,034.13 | 74.96 | 50,773.87 |
| Contractual Services | 1,350.00 | 0.00 | 0.00 | 0.00 | 1,350.00 |
| Supplies & Expenses | 60,250.00 | 14,755.70 | 16,249.18 | 26.97 | 44,000.82 |
| TOTAL Snow and Ice | 264,408.00 | 92,990.96 | 168,283.31 | 63.65 | 96,124.69 |
| **Stormwater Maintenance** | | | | | |
| Personnel Services | 34,533.00 | 533.46 | 533.46 | 1.54 | 33,999.54 |
| Contractual Services | 2,000.00 | 0.00 | 0.00 | 0.00 | 2,000.00 |
| Supplies & Expenses | 20,500.00 | 200.00 | 200.00 | 0.98 | 20,300.00 |
| TOTAL Stormwater Maintenance | 57,033.00 | 733.46 | 733.46 | 1.29 | 56,299.54 |

Attachment: Revenue & Expense - March 2019 (4075 : Revenue & Expense Report for Period Ending March 31, 2019)

REVENUE & EXPENSE REPORT (UNAUDITED)

AS OF: MARCH 31ST, 2019

10 -General Fund

| SUMMARY | ANNUAL BUDGET | CURRENT PERIOD | Y-T-D ACTUAL | % OF BUDGET | BUDGET BALANCE |
|---|---|---|---|---|---|
| **Street Painting-Marking** | | | | | |
| Personnel Services | 20,574.00 | 0.00 | 62.97 | 0.31 | 20,511.03 |
| Supplies & Expenses | 20,000.00 | 0.00 | 0.00 | 0.00 | 20,000.00 |
| TOTAL Street Painting-Marking | 40,574.00 | 0.00 | 62.97 | 0.16 | 40,511.03 |
| **Street Leave Expenses** | | | | | |
| Personnel Services | 72,506.00 | 1,963.32 | 8,711.24 | 12.01 | 63,794.76 |
| TOTAL Street Leave Expenses | 72,506.00 | 1,963.32 | 8,711.24 | 12.01 | 63,794.76 |
| **Street Lighting** | | | | | |
| Contractual Services | 165,275.00 | 12,889.30 | 28,016.89 | 16.95 | 137,258.11 |
| Capital Outlay | 2,225.00 | 0.00 | 0.00 | 0.00 | 2,225.00 |
| TOTAL Street Lighting | 167,500.00 | 12,889.30 | 28,016.89 | 16.73 | 139,483.11 |
| **Stormwater Plan/Const.** | | | | | |
| Contractual Services | 7,250.00 | 0.00 | 1,250.00 | 17.24 | 6,000.00 |
| TOTAL Stormwater Plan/Const. | 7,250.00 | 0.00 | 1,250.00 | 17.24 | 6,000.00 |
| **Airport** | | | | | |
| Personnel Services | 1,250.00 | 119.11 | 286.42 | 22.91 | 963.58 |
| Contractual Services | 115,675.00 | 11,949.01 | 27,492.82 | 23.77 | 88,182.18 |
| Supplies & Expenses | 31,075.00 | 1,469.96 | 6,335.89 | 20.39 | 24,739.11 |
| TOTAL Airport | 148,000.00 | 13,538.08 | 34,115.13 | 23.05 | 113,884.87 |
| **Transit** | | | | | |
| Personnel Services | 378,998.00 | 28,339.51 | 81,370.34 | 21.47 | 297,627.66 |
| Contractual Services | 3,250.00 | 340.05 | 934.74 | 28.76 | 2,315.26 |
| Supplies & Expenses | 137,425.00 | 5,894.87 | 12,257.73 | 8.92 | 125,167.27 |
| Fixed Charges | 32,600.00 | 0.00 | 16,853.12 | 51.70 | 15,746.88 |
| Technology | 1,750.00 | 126.84 | 372.54 | 21.29 | 1,377.46 |
| TOTAL Transit | 554,023.00 | 34,701.27 | 111,788.47 | 20.18 | 442,234.53 |
| **Garbage Collection** | | | | | |
| Personnel Services | 124,508.00 | 8,837.87 | 29,866.82 | 23.99 | 94,641.18 |
| Supplies & Expenses | 96,800.00 | 6,056.77 | 15,647.28 | 16.16 | 81,152.72 |
| Capital Outlay | 23,500.00 | 2,099.33 | 6,133.38 | 26.10 | 17,366.62 |
| TOTAL Garbage Collection | 244,808.00 | 16,993.97 | 51,647.48 | 21.10 | 193,160.52 |
| **Recycling** | | | | | |
| Personnel Services | 151,239.00 | 9,765.42 | 32,901.20 | 21.75 | 118,337.80 |
| Supplies & Expenses | 56,300.00 | 8,221.91 | 18,865.14 | 33.51 | 37,434.86 |
| TOTAL Recycling | 207,539.00 | 17,987.33 | 51,766.34 | 24.94 | 155,772.66 |
| **Weed & Nuisance Control** | | | | | |
| Personnel Services | 15,830.00 | 0.00 | 0.00 | 0.00 | 15,830.00 |
| Contractual Services | 250.00 | 0.00 | 0.00 | 0.00 | 250.00 |
| Supplies & Expenses | 1,250.00 | 0.00 | 0.00 | 0.00 | 1,250.00 |
| TOTAL Weed & Nuisance Control | 17,330.00 | 0.00 | 0.00 | 0.00 | 17,330.00 |

Attachment: Revenue & Expense - March 2019 (4075 : Revenue & Expense Report for Period Ending March 31, 2019)

REVENUE & EXPENSE REPORT (UNAUDITED)

AS OF: MARCH 31ST, 2019

10 -General Fund

| SUMMARY | ANNUAL BUDGET | CURRENT PERIOD | Y-T-D ACTUAL | % OF BUDGET | BUDGET BALANCE |
|---|---|---|---|---|---|
| **Health Officer** | | | | | |
| Personnel Services | 3,660.00 | 0.00 | 0.00 | 0.00 | 3,660.00 |
| Supplies & Expenses | 100.00 | 0.00 | 0.00 | 0.00 | 100.00 |
| TOTAL Health Officer | 3,760.00 | 0.00 | 0.00 | 0.00 | 3,760.00 |
| **MEC - Enrichment** | | | | | |
| Personnel Services | 129,919.00 | 9,913.36 | 29,589.04 | 22.77 | 100,329.96 |
| Contractual Services | 500.00 | 46.61 | 137.83 | 27.57 | 362.17 |
| Supplies & Expenses | 3,707.00 | 172.97 | 379.74 | 10.24 | 3,327.26 |
| Capital Outlay | 0.00 | 0.00 | 0.00 | 0.00 | 0.00 |
| TOTAL MEC - Enrichment | 134,126.00 | 10,132.94 | 30,106.61 | 22.45 | 104,019.39 |
| **Library** | | | | | |
| Personnel Services | 735,780.00 | 60,365.78 | 175,257.39 | 23.82 | 560,522.61 |
| Contractual Services | 48,200.00 | 3,910.91 | 10,675.52 | 22.15 | 37,524.48 |
| Supplies & Expenses | 53,805.00 | 6,901.49 | 14,966.59 | 27.82 | 38,838.41 |
| Fixed Charges | 9,400.00 | 1,704.00 | 1,830.00 | 19.47 | 7,570.00 |
| Capital Outlay | 0.00 | 24,089.30 | 24,425.78 | 0.00 | ( 24,425.78) |
| Print Media - Library | 51,950.00 | 4,245.05 | 8,695.64 | 16.74 | 43,254.36 |
| Non-Print Media-Library | 20,327.00 | 1,243.18 | 2,194.30 | 10.80 | 18,132.70 |
| Technology | 56,797.45 | 5,522.85 | 7,056.48 | 12.42 | 49,740.97 |
| TOTAL Library | 976,259.45 | 107,982.56 | 245,101.70 | 25.11 | 731,157.75 |
| **Parks** | | | | | |
| Personnel Services | 215,940.00 | 14,635.13 | 44,095.12 | 20.42 | 171,844.88 |
| Contractual Services | 31,250.00 | 1,025.41 | 2,690.09 | 8.61 | 28,559.91 |
| Supplies & Expenses | 40,350.00 | 1,498.51 | 4,331.24 | 10.73 | 36,018.76 |
| Capital Outlay | 24,000.00 | 0.00 | 2,284.36 | 9.52 | 21,715.64 |
| TOTAL Parks | 311,540.00 | 17,159.05 | 53,400.81 | 17.14 | 258,139.19 |
| **River Bend Trail** | | | | | |
| Contractual Services | 3,550.00 | 342.43 | 794.83 | 22.39 | 2,755.17 |
| TOTAL River Bend Trail | 3,550.00 | 342.43 | 794.83 | 22.39 | 2,755.17 |
| **Athletic Park Lights** | | | | | |
| Contractual Services | 1,800.00 | 80.30 | 252.99 | 14.06 | 1,547.01 |
| Supplies & Expenses | 200.00 | 0.00 | 0.00 | 0.00 | 200.00 |
| TOTAL Athletic Park Lights | 2,000.00 | 80.30 | 252.99 | 12.65 | 1,747.01 |
| **Ott's Park Lights** | | | | | |
| Contractual Services | 1,400.00 | 86.82 | 185.64 | 13.26 | 1,214.36 |
| Supplies & Expenses | 100.00 | 0.00 | 0.00 | 0.00 | 100.00 |
| TOTAL Ott's Park Lights | 1,500.00 | 86.82 | 185.64 | 12.38 | 1,314.36 |

Attachment: Revenue & Expense - March 2019 (4075 : Revenue & Expense Report for Period Ending March 31, 2019)

REVENUE & EXPENSE REPORT (UNAUDITED)

AS OF: MARCH 31ST, 2019

10 -General Fund

| SUMMARY | ANNUAL BUDGET | CURRENT PERIOD | Y-T-D ACTUAL | % OF BUDGET | BUDGET BALANCE |
|---|---|---|---|---|---|
| **Recreation Programs** | | | | | |
| Personnel Services | 221,912.00 | 11,282.21 | 33,751.42 | 15.21 | 188,160.58 |
| Contractual Services | 4,025.00 | 880.23 | 2,254.32 | 56.01 | 1,770.68 |
| Supplies & Expenses | 41,800.00 | 580.39 | 6,280.83 | 15.03 | 35,519.17 |
| TOTAL Recreation Programs | 267,737.00 | 12,742.83 | 42,286.57 | 15.79 | 225,450.43 |
| **Marketing - PR** | | | | | |
| Personnel Services | 2,875.00 | 0.00 | 0.00 | 0.00 | 2,875.00 |
| Supplies & Expenses | 18,625.00 | 4,050.00 | 4,329.00 | 23.24 | 14,296.00 |
| TOTAL Marketing - PR | 21,500.00 | 4,050.00 | 4,329.00 | 20.13 | 17,171.00 |
| **Decorations & Banners** | | | | | |
| Personnel Services | 2,775.00 | 0.00 | 1,079.85 | 38.91 | 1,695.15 |
| Contractual Services | 300.00 | 0.00 | 0.00 | 0.00 | 300.00 |
| Supplies & Expenses | 1,000.00 | 0.00 | 0.00 | 0.00 | 1,000.00 |
| Capital Outlay | 1,500.00 | 0.00 | 0.00 | 0.00 | 1,500.00 |
| TOTAL Decorations & Banners | 5,575.00 | 0.00 | 1,079.85 | 19.37 | 4,495.15 |
| **Outside Agencies** | | | | | |
| Supplies & Expenses | 46,500.00 | 15,500.00 | 37,500.00 | 80.65 | 9,000.00 |
| TOTAL Outside Agencies | 46,500.00 | 15,500.00 | 37,500.00 | 80.65 | 9,000.00 |
| **MARC - Smith Center** | | | | | |
| Personnel Services | 36,550.00 | 4,643.21 | 12,912.91 | 35.33 | 23,637.09 |
| Contractual Services | 55,250.00 | 5,764.54 | 16,129.22 | 29.19 | 39,120.78 |
| Supplies & Expenses | 19,950.00 | 766.79 | 3,225.29 | 16.17 | 16,724.71 |
| Capital Outlay | 6,500.00 | 0.00 | 0.00 | 0.00 | 6,500.00 |
| TOTAL MARC - Smith Center | 118,250.00 | 11,174.54 | 32,267.42 | 27.29 | 85,982.58 |
| **Aquatic Center** | | | | | |
| Personnel Services | 88,325.00 | 0.00 | 0.00 | 0.00 | 88,325.00 |
| Contractual Services | 24,300.00 | 348.06 | 1,093.69 | 4.50 | 23,206.31 |
| Supplies & Expenses | 41,250.00 | 0.00 | 0.00 | 0.00 | 41,250.00 |
| Technology | 2,500.00 | 0.00 | 0.00 | 0.00 | 2,500.00 |
| TOTAL Aquatic Center | 156,375.00 | 348.06 | 1,093.69 | 0.70 | 155,281.31 |
| **Economic Development** | | | | | |
| Contractual Services | 20,200.00 | 20,200.00 | 20,200.00 | 100.00 | 0.00 |
| TOTAL Economic Development | 20,200.00 | 20,200.00 | 20,200.00 | 100.00 | 0.00 |
| **Transfers** | | | | | |
| Transfers | 0.00 | 0.00 | 0.00 | 0.00 | 0.00 |
| TOTAL Transfers | 0.00 | 0.00 | 0.00 | 0.00 | 0.00 |
| TOTAL EXPENDITURES | 12,204,903.45 | 1,096,669.66 | 2,830,787.77 | 23.19 | 9,374,115.68 |
| REVENUES OVER/(UNDER) EXPENDITURES | 44,229.20 | ( 200,794.83) | 2,670,937.48 | 0.00 | ( 2,626,708.28) |

Attachment: Revenue & Expense - March 2019 (4075 : Revenue & Expense Report for Period Ending March 31, 2019)

REVENUE & EXPENSE REPORT (UNAUDITED)

AS OF: MARCH 31ST, 2019

20 -Remedial Action-Landfill

| SUMMARY | ANNUAL BUDGET | CURRENT PERIOD | Y-T-D ACTUAL | % OF BUDGET | BUDGET BALANCE |
|---|---|---|---|---|---|
| EXPENDITURES | | | | | |
| Remediation Action | | | | | |
| Personnel Services | 8,260.00 | 1,388.82 | 1,671.90 | 20.24 | 6,588.10 |
| Contractual Services | 19,990.00 | 139.86 | 1,430.82 | 7.16 | 18,559.18 |
| Supplies & Expenses | 250.00 | 0.00 | 0.00 | 0.00 | 250.00 |
| TOTAL Remediation Action | 28,500.00 | 1,528.68 | 3,102.72 | 10.89 | 25,397.28 |
| TOTAL EXPENDITURES | 28,500.00 | 1,528.68 | 3,102.72 | 10.89 | 25,397.28 |
| REVENUES OVER/(UNDER) EXPENDITURES | ( 28,500.00) | ( 1,528.68) | ( 3,102.72) | 0.00 | ( 25,397.28) |

*** END OF REPORT ***

Attachment: Revenue & Expense - March 2019 (4075 : Revenue & Expense Report for Period Ending March 31, 2019)

REVENUE & EXPENSE REPORT (UNAUDITED)

AS OF: MARCH 31ST, 2019

21 -Police - SRO

| SUMMARY | ANNUAL BUDGET | CURRENT PERIOD | Y-T-D ACTUAL | % OF BUDGET | BUDGET BALANCE |
|---|---|---|---|---|---|
| **REVENUES** | | | | | |
| **Police-SRO** | | | | | |
| Taxes (or Utility Rev.) | 57,144.00 | 0.00 | 0.00 | 0.00 | 57,144.00 |
| Intergovernmental | 116,088.00 | 0.00 | 0.00 | 0.00 | 116,088.00 |
| TOTAL Police-SRO | 173,232.00 | 0.00 | 0.00 | 0.00 | 173,232.00 |
| TOTAL REVENUE | 173,232.00 | 0.00 | 0.00 | 0.00 | 173,232.00 |
| **EXPENDITURES** | | | | | |
| **Police-SRO** | | | | | |
| Personnel Services | 169,282.00 | 8,551.75 | 25,736.73 | 15.20 | 143,545.27 |
| Supplies & Expenses | 950.00 | 0.00 | 0.00 | 0.00 | 950.00 |
| Fixed Charges | 3,000.00 | 0.00 | 0.00 | 0.00 | 3,000.00 |
| TOTAL Police-SRO | 173,232.00 | 8,551.75 | 25,736.73 | 14.86 | 147,495.27 |
| TOTAL EXPENDITURES | 173,232.00 | 8,551.75 | 25,736.73 | 14.86 | 147,495.27 |
| REVENUES OVER/(UNDER) EXPENDITURES | 0.00 | ( 8,551.75) | ( 25,736.73) | 0.00 | 25,736.73 |

*** END OF REPORT ***

Attachment: Revenue & Expense - March 2019 (4075 : Revenue & Expense Report for Period Ending March 31, 2019)

REVENUE & EXPENSE REPORT (UNAUDITED)

AS OF: MARCH 31ST, 2019

24 -Merrill Festival Grounds

| SUMMARY | ANNUAL BUDGET | CURRENT PERIOD | Y-T-D ACTUAL | % OF BUDGET | BUDGET BALANCE |
|---|---|---|---|---|---|
| **REVENUES** | | | | | |
| **Tractor Pull** | | | | | |
| Public Charges-Services | 7,000.00 | 0.00 | 0.00 | 0.00 | 7,000.00 |
| Miscellaneous Revenues | 0.00 | 0.00 | 0.00 | 0.00 | 0.00 |
| TOTAL Tractor Pull | 7,000.00 | 0.00 | 0.00 | 0.00 | 7,000.00 |
| **Merrill Festival Grounds** | | | | | |
| Taxes (or Utility Rev.) | 36,000.00 | 0.00 | 0.00 | 0.00 | 36,000.00 |
| Public Charges-Services | 11,750.00 | 0.00 | 9,461.25 | 80.52 | 2,288.75 |
| Miscellaneous Revenues | 84,400.00 | 0.00 | 0.00 | 0.00 | 84,400.00 |
| TOTAL Merrill Festival Grounds | 132,150.00 | 0.00 | 9,461.25 | 7.16 | 122,688.75 |
| **Room Tax** | | | | | |
| Taxes (or Utility Rev.) | 95,000.00 | 13,199.61 | 22,365.27 | 23.54 | 72,634.73 |
| TOTAL Room Tax | 95,000.00 | 13,199.61 | 22,365.27 | 23.54 | 72,634.73 |
| **Bierman Building** | | | | | |
| Public Charges-Services | 12,500.00 | 1,700.00 | 1,700.00 | 13.60 | 10,800.00 |
| TOTAL Bierman Building | 12,500.00 | 1,700.00 | 1,700.00 | 13.60 | 10,800.00 |
| TOTAL REVENUE | 246,650.00 | 14,899.61 | 33,526.52 | 13.59 | 213,123.48 |
| **EXPENDITURES** | | | | | |
| **Tractor Pull** | | | | | |
| Personnel Services | 5,750.00 | 0.00 | 0.00 | 0.00 | 5,750.00 |
| Contractual Services | 0.00 | 0.00 | 0.00 | 0.00 | 0.00 |
| Supplies & Expenses | 0.00 | 0.00 | 0.00 | 0.00 | 0.00 |
| Fixed Charges | 0.00 | 0.00 | 0.00 | 0.00 | 0.00 |
| Capital Outlay | 1,250.00 | 0.00 | 0.00 | 0.00 | 1,250.00 |
| TOTAL Tractor Pull | 7,000.00 | 0.00 | 0.00 | 0.00 | 7,000.00 |
| **Merrill Festival Grounds** | | | | | |
| Personnel Services | 6,400.00 | 1.52 | 2.79 | 0.04 | 6,397.21 |
| Contractual Services | 31,880.00 | 1,446.10 | 3,474.69 | 10.90 | 28,405.31 |
| Supplies & Expenses | 6,000.00 | 0.00 | 0.00 | 0.00 | 6,000.00 |
| Capital Outlay | 82,200.00 | 0.00 | 0.00 | 0.00 | 82,200.00 |
| TOTAL Merrill Festival Grounds | 126,480.00 | 1,447.62 | 3,477.48 | 2.75 | 123,002.52 |

Attachment: Revenue & Expense - March 2019 (4075 : Revenue & Expense Report for Period Ending March 31, 2019)

REVENUE & EXPENSE REPORT (UNAUDITED)

AS OF: MARCH 31ST, 2019

24 -Merrill Festival Grounds

| SUMMARY | ANNUAL BUDGET | CURRENT PERIOD | Y-T-D ACTUAL | % OF BUDGET | BUDGET BALANCE |
|---|---|---|---|---|---|
| Room Tax | | | | | |
| Supplies & Expenses | 74,550.00 | 17,551.03 | 17,551.03 | 23.54 | 56,998.97 |
| TOTAL Room Tax | 74,550.00 | 17,551.03 | 17,551.03 | 23.54 | 56,998.97 |
| Bierman Building | | | | | |
| Personnel Services | 18,200.00 | 1,345.20 | 3,796.52 | 20.86 | 14,403.48 |
| Contractual Services | 24,500.00 | 1,607.00 | 3,984.39 | 16.26 | 20,515.61 |
| Supplies & Expenses | 4,675.00 | 514.50 | 675.55 | 14.45 | 3,999.45 |
| Capital Outlay | 0.00 | 0.00 | 0.00 | 0.00 | 0.00 |
| TOTAL Bierman Building | 47,375.00 | 3,466.70 | 8,456.46 | 17.85 | 38,918.54 |
| TOTAL EXPENDITURES | 255,405.00 | 22,465.35 | 29,484.97 | 11.54 | 225,920.03 |
| REVENUES OVER/(UNDER) EXPENDITURES | ( 8,755.00) | ( 7,565.74) | 4,041.55 | 0.00 | ( 12,796.55) |

*** END OF REPORT ***

Attachment: Revenue & Expense - March 2019 (4075 : Revenue & Expense Report for Period Ending March 31, 2019)

REVENUE & EXPENSE REPORT (UNAUDITED)

AS OF: MARCH 31ST, 2019

25 -Community Development

| SUMMARY | ANNUAL BUDGET | CURRENT PERIOD | Y-T-D ACTUAL | % OF BUDGET | BUDGET BALANCE |
|---|---|---|---|---|---|
| **REVENUES** | | | | | |
| CDBG Grants/Loans | | | | | |
| Miscellaneous Revenues | 139,635.00 | 17,113.98 | 50,642.93 | 36.27 | 88,992.07 |
| TOTAL CDBG Grants/Loans | 139,635.00 | 17,113.98 | 50,642.93 | 36.27 | 88,992.07 |
| Community Development | | | | | |
| Taxes (or Utility Rev.) | 14,993.00 | 0.00 | 0.00 | 0.00 | 14,993.00 |
| Intergov Charges (Misc.) | 11,500.00 | 0.00 | 325.00 | 2.83 | 11,175.00 |
| TOTAL Community Development | 26,493.00 | 0.00 | 325.00 | 1.23 | 26,168.00 |
| TOTAL REVENUE | 166,128.00 | 17,113.98 | 50,967.93 | 30.68 | 115,160.07 |
| **EXPENDITURES** | | | | | |
| CDBG Grants/Loans | | | | | |
| Special Services | 100,500.00 | 75.00 | 30,210.00 | 30.06 | 70,290.00 |
| TOTAL CDBG Grants/Loans | 100,500.00 | 75.00 | 30,210.00 | 30.06 | 70,290.00 |
| Community Development | | | | | |
| Personnel Services | 23,668.00 | 1,813.62 | 5,440.82 | 22.99 | 18,227.18 |
| Contractual Services | 700.00 | 9.06 | 26.62 | 3.80 | 673.38 |
| Supplies & Expenses | 2,125.00 | 65.92 | 201.42 | 9.48 | 1,923.58 |
| TOTAL Community Development | 26,493.00 | 1,888.60 | 5,668.86 | 21.40 | 20,824.14 |
| TOTAL EXPENDITURES | 126,993.00 | 1,963.60 | 35,878.86 | 28.25 | 91,114.14 |
| REVENUES OVER/(UNDER) EXPENDITURES | 39,135.00 | 15,150.38 | 15,089.07 | 0.00 | 24,045.93 |

*** END OF REPORT ***

Attachment: Revenue & Expense - March 2019 (4075 : Revenue & Expense Report for Period Ending March 31, 2019)

REVENUE & EXPENSE REPORT (UNAUDITED)

AS OF: MARCH 31ST, 2019

27 -Merrill Airport Fuel

| SUMMARY | ANNUAL BUDGET | CURRENT PERIOD | Y-T-D ACTUAL | % OF BUDGET | BUDGET BALANCE |
|---|---|---|---|---|---|
| REVENUES | | | | | |
| Aviation Fuel | | | | | |
| Public Charges-Services | 88,550.00 | 4,023.24 | 7,502.74 | 8.47 | 81,047.26 |
| Miscellaneous Revenues | 0.00 | 0.00 | 0.00 | 0.00 | 0.00 |
| Other Financing Sources | 100.00 | 0.00 | 0.00 | 0.00 | 100.00 |
| TOTAL Aviation Fuel | 88,650.00 | 4,023.24 | 7,502.74 | 8.46 | 81,147.26 |
| TOTAL REVENUE | 88,650.00 | 4,023.24 | 7,502.74 | 8.46 | 81,147.26 |
| EXPENDITURES | | | | | |
| Aviation Fuel | | | | | |
| Contractual Services | 4,800.00 | 270.12 | 2,407.38 | 50.15 | 2,392.62 |
| Special Services | 83,350.00 | 94.78 | 27,032.89 | 32.43 | 56,317.11 |
| Fixed Charges | 1,625.00 | 812.50 | 812.50 | 50.00 | 812.50 |
| Capital Outlay | 0.00 | 0.00 | 0.00 | 0.00 | 0.00 |
| TOTAL Aviation Fuel | 89,775.00 | 1,177.40 | 30,252.77 | 33.70 | 59,522.23 |
| TOTAL EXPENDITURES | 89,775.00 | 1,177.40 | 30,252.77 | 33.70 | 59,522.23 |
| REVENUES OVER/(UNDER) EXPENDITURES | ( 1,125.00) | 2,845.84 | ( 22,750.03) | 0.00 | 21,625.03 |

*** END OF REPORT ***

*** END OF REPORT ***

Attachment: Revenue & Expense - March 2019 (4075 : Revenue & Expense Report for Period Ending March 31, 2019)

REVENUE & EXPENSE REPORT (UNAUDITED)

AS OF: MARCH 31ST, 2019

30 -Debt Sevice

Debt Service

| | ANNUAL BUDGET | CURRENT PERIOD | Y-T-D ACTUAL | % OF BUDGET | BUDGET BALANCE |
|---|---|---|---|---|---|
| **REVENUES** | | | | | |
| Taxes (or Utility Rev.) | | | | | |
| 40000-41027 Transfer from Airport | 1,625.00 | 812.50 | 812.50 | 50.00 | 812.50 |
| 40000-41041 Transfer from TID | 805,776.00 | 28,442.58 | 28,442.58 | 3.53 | 777,333.42 |
| 40000-41110 Tax Levy - Debt Service | 1,516,428.00 | 0.00 | 0.00 | 0.00 | 1,516,428.00 |
| TOTAL Taxes (or Utility Rev.) | 2,323,829.00 | 29,255.08 | 29,255.08 | 1.26 | 2,294,573.92 |
| Miscellaneous Revenues | | | | | |
| 40000-48110 Interest - Debt Service Fund | 0.00 | 0.00 | 0.00 | 0.00 | 0.00 |
| 40000-48250 Fed Stimulus - BAB | 1,589.00 | 0.00 | 1,596.20 | 100.45 | ( 7.20) |
| TOTAL Miscellaneous Revenues | 1,589.00 | 0.00 | 1,596.20 | 100.45 | ( 7.20) |
| Other Financing Sources | | | | | |
| 40000-49110 Proceeds from LT Debt | 0.00 | 0.00 | 0.00 | 0.00 | 0.00 |
| 40000-49120 Premium on Debt Insurance | 0.00 | 0.00 | 0.00 | 0.00 | 0.00 |
| 40000-49125 Fund 30-Offset | 38,747.00 | 0.00 | 0.00 | 0.00 | 38,747.00 |
| 40000-49200 Transfer-Prior Service DS | 11,500.00 | 13,318.00 | 13,318.00 | 115.81 | ( 1,818.00) |
| TOTAL Other Financing Sources | 50,247.00 | 13,318.00 | 13,318.00 | 26.51 | 36,929.00 |
| TOTAL REVENUES | 2,375,665.00 | 42,573.08 | 44,169.28 | 1.86 | 2,331,495.72 |
| **EXPENDITURES** | | | | | |
| Debt Service | | | | | |
| 50000-06-11755 STL 2009-2 Equip | 14,697.25 | 0.00 | 14,697.25 | 100.00 | 0.00 |
| 50000-06-11800 STL 2010-1 Prin BAB | 38,000.00 | 0.00 | 38,000.00 | 100.00 | 0.00 |
| 50000-06-11900 GO 2013A - Fire Primarily | 175,000.00 | 0.00 | 0.00 | 0.00 | 175,000.00 |
| 50000-06-11905 GO 2013B - Various | 390,000.00 | 0.00 | 0.00 | 0.00 | 390,000.00 |
| 50000-06-11913 Series GO2016A-Various | 75,000.00 | 0.00 | 0.00 | 0.00 | 75,000.00 |
| 50000-06-11916 Series GO2016B-Various | 114,849.00 | 0.00 | 0.00 | 0.00 | 114,849.00 |
| 50000-06-11923 GO 2017C - Various | 95,000.00 | 0.00 | 0.00 | 0.00 | 95,000.00 |
| 50000-06-11925 GO 2017D - Various | 70,000.00 | 0.00 | 0.00 | 0.00 | 70,000.00 |
| 50000-06-11927 GO 2018A Notes-Prin. | 115,000.00 | 0.00 | 0.00 | 0.00 | 115,000.00 |
| 50000-06-11928 GO 2018B-Bonds Princ | 35,000.00 | 0.00 | 0.00 | 0.00 | 35,000.00 |
| 50000-06-12043 STL 2009-1 -Prin Faciliti | 0.00 | 0.00 | 0.00 | 0.00 | 0.00 |
| 50000-06-12045 SIB Prin.-W. Main St. | 9,985.64 | 0.00 | 2,477.76 | 24.81 | 7,507.88 |
| 50000-06-12050 STL 2005 Prin.-Streets | 16,622.48 | 0.00 | 16,622.48 | 100.00 | 0.00 |
| 50000-06-12065 STF 2011-1 BAB-10 Year | 41,966.29 | 0.00 | 41,966.29 | 100.00 | 0.00 |
| 50000-06-18075 STL 2004 Prin.- Pension | 142,316.48 | 0.00 | 142,316.48 | 100.00 | 0.00 |
| 50000-06-21755 STL 2009-2 Int Equip | 661.38 | 0.00 | 661.38 | 100.00 | 0.00 |
| 50000-06-21800 STL 2010-1 BAB Int. | 1,710.00 | 0.00 | 1,710.00 | 100.00 | 0.00 |
| 50000-06-21900 GO2013 A - Fire Interest | 115,955.00 | 0.00 | 0.00 | 0.00 | 115,955.00 |
| 50000-06-21905 GO 2013B - Various Int. | 32,450.00 | 0.00 | 0.00 | 0.00 | 32,450.00 |
| 50000-06-21913 GO 2016A Int - Various | 30,247.50 | 15,123.75 | 15,123.75 | 50.00 | 15,123.75 |
| 50000-06-21914 GO 2016B Int-Airport | 1,625.00 | 812.50 | 812.50 | 50.00 | 812.50 |
| 50000-06-21916 GO 2016B Int-Various | 61,421.60 | 30,710.80 | 30,710.80 | 50.00 | 30,710.80 |

Attachment: Revenue & Expense - March 2019 (4075 : Revenue & Expense Report for Period Ending March 31, 2019)

REVENUE & EXPENSE REPORT (UNAUDITED)

AS OF: MARCH 31ST, 2019

30 -Debt Sevice

Debt Service

| | ANNUAL BUDGET | CURRENT PERIOD | Y-T-D ACTUAL | % OF BUDGET | BUDGET BALANCE |
|---|---|---|---|---|---|
| 50000-06-21923 GO 2017C - Int | 46,950.00 | 23,475.00 | 23,475.00 | 50.00 | 23,475.00 |
| 50000-06-21925 GO 2017D - Int | 14,007.50 | 7,003.75 | 7,003.75 | 50.00 | 7,003.75 |
| 50000-06-21927 GO 2018A Notes Int. | 32,430.13 | 0.00 | 0.00 | 0.00 | 32,430.13 |
| 50000-06-21928 GO 2018B-Bonds Int | 31,063.86 | 0.00 | 0.00 | 0.00 | 31,063.86 |
| 50000-06-22043 STL 2009-1-Int Facilities | 0.00 | 0.00 | 0.00 | 0.00 | 0.00 |
| 50000-06-22045 SIB Int.-W. Main St. | 328.87 | 0.00 | 100.86 | 30.67 | 228.01 |
| 50000-06-22050 STL 2005 Int.-Streets | 6,765.68 | 0.00 | 6,765.68 | 100.00 | 0.00 |
| 50000-06-22065 STF 2011-1 Int BAB-10 YR | 3,152.02 | 0.00 | 3,152.02 | 100.00 | 0.00 |
| 50000-06-28075 STL 2004 Int.- Pension | 6,038.70 | 0.00 | 6,038.70 | 100.00 | 0.00 |
| 50000-06-38087 GO 2013A | 0.00 | 0.00 | 0.00 | 0.00 | 0.00 |
| 50000-06-38090 GO 2013B | 0.00 | 0.00 | 0.00 | 0.00 | 0.00 |
| 50000-06-38091 GO 2016A | 0.00 | 400.00 | 400.00 | 0.00 | ( 400.00) |
| 50000-06-38092 GO 2016B | 0.00 | 400.00 | 400.00 | 0.00 | ( 400.00) |
| 50000-06-38093 GO 2017C | 0.00 | 0.00 | 0.00 | 0.00 | 0.00 |
| 50000-06-38094 GO 2017D | 0.00 | 0.00 | 0.00 | 0.00 | 0.00 |
| 50000-06-38100 BAB Fed Paperwork | 0.00 | 0.00 | 300.00 | 0.00 | ( 300.00) |
| TOTAL Debt Service | 1,718,244.38 | 77,925.80 | 352,734.70 | 20.53 | 1,365,509.68 |
| TOTAL EXPENDITURES | 1,718,244.38 | 77,925.80 | 352,734.70 | 20.53 | 1,365,509.68 |
| REVENUES OVER/(UNDER) EXPENDITURES | 657,420.62 | ( 35,352.72) | ( 308,565.42) | 0.00 | 965,986.04 |

Attachment: Revenue & Expense - March 2019 (4075 : Revenue & Expense Report for Period Ending March 31, 2019)

REVENUE & EXPENSE REPORT (UNAUDITED)

AS OF: MARCH 31ST, 2019

30 -Debt Sevice

TID - Debt Service

| | ANNUAL BUDGET | CURRENT PERIOD | Y-T-D ACTUAL | % OF BUDGET | BUDGET BALANCE |
|---|---|---|---|---|---|
| **EXPENDITURES** | | | | | |
| **Debt Service** | | | | | |
| 54000-06-14006 GO2018B - TID6 Princ | 5,000.00 | 0.00 | 0.00 | 0.00 | 5,000.00 |
| 54000-06-14008 GO2018B - TID8 Princ | 20,000.00 | 0.00 | 0.00 | 0.00 | 20,000.00 |
| 54000-06-14080 GO2017C-TID4 Prin. | 20,000.00 | 0.00 | 0.00 | 0.00 | 20,000.00 |
| 54000-06-14085 GO2013A - TID #5 Prin | 1,489.36 | 0.00 | 0.00 | 0.00 | 1,489.36 |
| 54000-06-14090 GO2013A - TID #6 Prin | 8,510.64 | 0.00 | 0.00 | 0.00 | 8,510.64 |
| 54000-06-14821 GO2017C-TID 11 | 25,000.00 | 0.00 | 0.00 | 0.00 | 25,000.00 |
| 54000-06-14827 GO2017C-TID 7 | 5,000.00 | 0.00 | 0.00 | 0.00 | 5,000.00 |
| 54000-06-14828 GO2017C-TID 8 | 5,000.00 | 0.00 | 0.00 | 0.00 | 5,000.00 |
| 54000-06-14829 GO2017C-TID 9 | 10,000.00 | 0.00 | 0.00 | 0.00 | 10,000.00 |
| 54000-06-14916 GO 2016B-TID3 | 54,500.00 | 0.00 | 0.00 | 0.00 | 54,500.00 |
| 54000-06-14917 GO 2016B-TID6 | 9,151.00 | 0.00 | 0.00 | 0.00 | 9,151.00 |
| 54000-06-14918 GO 2016B-TID8 | 5,000.00 | 0.00 | 0.00 | 0.00 | 5,000.00 |
| 54000-06-14973 TID3 2017 Rev Bond-Princ | 159,000.00 | 0.00 | 0.00 | 0.00 | 159,000.00 |
| 54000-06-14974 TID4 2017 Rev Bond-Princ | 46,000.00 | 0.00 | 0.00 | 0.00 | 46,000.00 |
| 54000-06-14975 TID3 2018 Rev Bond-Princ | 193,000.00 | 0.00 | 0.00 | 0.00 | 193,000.00 |
| 54000-06-24006 GO2018B - TID6 Int | 3,174.89 | 0.00 | 0.00 | 0.00 | 3,174.89 |
| 54000-06-24008 GO2018B - TID8 Int | 14,673.75 | 0.00 | 0.00 | 0.00 | 14,673.75 |
| 54000-06-24080 GO 2017C Int. -TID #4 | 6,600.00 | 3,300.00 | 3,300.00 | 50.00 | 3,300.00 |
| 54000-06-24085 GO 2013A Int. -TID #5 | 995.27 | 0.00 | 0.00 | 0.00 | 995.27 |
| 54000-06-24090 GO 2013A Int. -TID #6 | 5,687.23 | 0.00 | 0.00 | 0.00 | 5,687.23 |
| 54000-06-24821 GO2017C Int - TID 11 | 18,500.00 | 9,250.00 | 9,250.00 | 50.00 | 9,250.00 |
| 54000-06-24827 GO2017C Int - TID 7 | 5,175.00 | 2,587.50 | 2,587.50 | 50.00 | 2,587.50 |
| 54000-06-24828 GO2017C Int - TID 8 | 4,075.00 | 2,037.50 | 2,037.50 | 50.00 | 2,037.50 |
| 54000-06-24829 GO2017C Int - TID 9 | 8,950.00 | 4,475.00 | 4,475.00 | 50.00 | 4,475.00 |
| 54000-06-24916 GO 2016B Int-TID 3 | 8,668.50 | 4,334.25 | 4,334.25 | 50.00 | 4,334.25 |
| 54000-06-24917 GO 2016B Int-TID 6 | 2,991.66 | 1,495.83 | 1,495.83 | 50.00 | 1,495.83 |
| 54000-06-24918 GO 2016B Int-TID 8 | 1,925.00 | 962.50 | 962.50 | 50.00 | 962.50 |
| 54000-06-24927 NAN Series 2016C-TID 7 | 3,236.33 | 0.00 | 0.00 | 0.00 | 3,236.33 |
| 54000-06-24940 NAN Series 2016C-TID 10 | 20,024.81 | 0.00 | 0.00 | 0.00 | 20,024.81 |
| 54000-06-24941 NAN Series 2016C-TID 11 | 20,429.36 | 0.00 | 0.00 | 0.00 | 20,429.36 |
| 54000-06-24973 TID3 2017 Rev Bond-Int | 41,055.20 | 0.00 | 0.00 | 0.00 | 41,055.20 |
| 54000-06-24974 TID4 2017 Rev Bond-Int | 16,309.80 | 0.00 | 0.00 | 0.00 | 16,309.80 |
| 54000-06-24975 TID3 2018C Rev Bond | 56,652.56 | 0.00 | 0.00 | 0.00 | 56,652.56 |
| TOTAL Debt Service | 805,775.36 | 28,442.58 | 28,442.58 | 3.53 | 777,332.78 |
| TOTAL EXPENDITURES | 805,775.36 | 28,442.58 | 28,442.58 | 3.53 | 777,332.78 |
| FUND TOTAL REVENUES | 2,375,665.00 | 42,573.08 | 44,169.28 | 1.86 | 2,331,495.72 |
| FUND TOTAL EXPENDITURES | 2,524,019.74 | 106,368.38 | 381,177.28 | 15.10 | 2,142,842.46 |
| REVENUES OVER/(UNDER) EXPENDITURES | ( 148,354.74) | ( 63,795.30) | ( 337,008.00) | 0.00 | 188,653.26 |

*** END OF REPORT ***

Attachment: Revenue & Expense - March 2019 (4075 : Revenue & Expense Report for Period Ending March 31, 2019)

4-03-2019 04:08 PM CITY OF MERRILL PAGE: 1

REVENUE & EXPENSE REPORT (UNAUDITED)

AS OF: MARCH 31ST, 2019

40 -TID No. 10 - Fox Point

| SUMMARY | ANNUAL BUDGET | CURRENT PERIOD | Y-T-D ACTUAL | % OF BUDGET | BUDGET BALANCE |
|---|---|---|---|---|---|
| REVENUES | | | | | |
| TID #10-Fox Point | | | | | |
| Taxes (or Utility Rev.) | 0.00 | 0.00 | 0.00 | 0.00 | 0.00 |
| TOTAL TID #10-Fox Point | 0.00 | 0.00 | 0.00 | 0.00 | 0.00 |
| TOTAL REVENUE | 0.00 | 0.00 | 0.00 | 0.00 | 0.00 |
| EXPENDITURES | | | | | |
| TID #10-Fox Point | | | | | |
| Personnel Services | 1,282.00 | 0.00 | 0.00 | 0.00 | 1,282.00 |
| Contractual Services | 400.00 | 150.00 | 150.00 | 37.50 | 250.00 |
| Special Services | 0.00 | 0.00 | 0.00 | 0.00 | 0.00 |
| Fixed Charges | 20,024.81 | 0.00 | 0.00 | 0.00 | 20,024.81 |
| Capital Outlay | 0.00 | 0.00 | 0.00 | 0.00 | 0.00 |
| TOTAL TID #10-Fox Point | 21,706.81 | 150.00 | 150.00 | 0.69 | 21,556.81 |
| TOTAL EXPENDITURES | 21,706.81 | 150.00 | 150.00 | 0.69 | 21,556.81 |
| REVENUES OVER/(UNDER) EXPENDITURES | ( 21,706.81) | ( 150.00) | ( 150.00) | 0.00 | ( 21,556.81) |

*** END OF REPORT ***

Attachment: Revenue & Expense - March 2019 (4075 : Revenue & Expense Report for Period Ending March 31, 2019)

REVENUE & EXPENSE REPORT (UNAUDITED)

AS OF: MARCH 31ST, 2019

41 -TID No. 11- Apartments

| SUMMARY | ANNUAL BUDGET | CURRENT PERIOD | Y-T-D ACTUAL | % OF BUDGET | BUDGET BALANCE |
|---|---|---|---|---|---|
| REVENUES | | | | | |
| TID #11 - Apartments | | | | | |
| Taxes (or Utility Rev.) | 199,960.65 | 0.00 | 0.00 | 0.00 | 199,960.65 |
| Specials (Utility Rev.) | 0.00 | 0.00 | 0.00 | 0.00 | 0.00 |
| Intergovernmental | 12,567.76 | 0.00 | 0.00 | 0.00 | 12,567.76 |
| Public Charges-Services | 0.00 | 0.00 | 0.00 | 0.00 | 0.00 |
| Miscellaneous Revenues | 0.00 | 0.00 | 0.00 | 0.00 | 0.00 |
| TOTAL TID #11 - Apartments | 212,528.41 | 0.00 | 0.00 | 0.00 | 212,528.41 |
| TOTAL REVENUE | 212,528.41 | 0.00 | 0.00 | 0.00 | 212,528.41 |
| EXPENDITURES | | | | | |
| TID #11 - Apartments | | | | | |
| Personnel Services | 2,255.00 | 0.00 | 0.00 | 0.00 | 2,255.00 |
| Contractual Services | 2,650.00 | 1,650.00 | 1,650.00 | 62.26 | 1,000.00 |
| Special Services | 100,000.00 | 0.00 | 0.00 | 0.00 | 100,000.00 |
| Fixed Charges | 93,929.36 | 9,250.00 | 9,250.00 | 9.85 | 84,679.36 |
| Capital Outlay | 0.00 | 0.00 | 0.00 | 0.00 | 0.00 |
| TOTAL TID #11 - Apartments | 198,834.36 | 10,900.00 | 10,900.00 | 5.48 | 187,934.36 |
| TOTAL EXPENDITURES | 198,834.36 | 10,900.00 | 10,900.00 | 5.48 | 187,934.36 |
| REVENUES OVER/(UNDER) EXPENDITURES | 13,694.05 | ( 10,900.00) | ( 10,900.00) | 0.00 | 24,594.05 |

*** END OF REPORT ***

Attachment: Revenue & Expense - March 2019 (4075 : Revenue & Expense Report for Period Ending March 31, 2019)

REVENUE & EXPENSE REPORT (UNAUDITED)

AS OF: MARCH 31ST, 2019

42 -TID # 12 - Weinbrenner

| SUMMARY | ANNUAL BUDGET | CURRENT PERIOD | Y-T-D ACTUAL | % OF BUDGET | BUDGET BALANCE |
|---|---|---|---|---|---|
| REVENUES | | | | | |
| TID #12 - Weinbrenner | | | | | |
| Taxes (or Utility Rev.) | 157,004.68 | 0.00 | 0.00 | 0.00 | 157,004.68 |
| TOTAL TID #12 - Weinbrenner | 157,004.68 | 0.00 | 0.00 | 0.00 | 157,004.68 |
| TOTAL REVENUE | 157,004.68 | 0.00 | 0.00 | 0.00 | 157,004.68 |
| EXPENDITURES | | | | | |
| TID #12 - Weinbrenner | | | | | |
| Personnel Services | 6,625.00 | 0.00 | 0.00 | 0.00 | 6,625.00 |
| Contractual Services | 400.00 | 150.00 | 150.00 | 37.50 | 250.00 |
| Capital Outlay | 135,000.00 | 0.00 | 0.00 | 0.00 | 135,000.00 |
| TOTAL TID #12 - Weinbrenner | 142,025.00 | 150.00 | 150.00 | 0.11 | 141,875.00 |
| TOTAL EXPENDITURES | 142,025.00 | 150.00 | 150.00 | 0.11 | 141,875.00 |
| REVENUES OVER/(UNDER) EXPENDITURES | 14,979.68 | ( 150.00) | ( 150.00) | 0.00 | 15,129.68 |

*** END OF REPORT ***

Attachment: Revenue & Expense - March 2019 (4075 : Revenue & Expense Report for Period Ending March 31, 2019)

REVENUE & EXPENSE REPORT (UNAUDITED)

AS OF: MARCH 31ST, 2019

43 -TID #3 - East Side

| SUMMARY | ANNUAL BUDGET | CURRENT PERIOD | Y-T-D ACTUAL | % OF BUDGET | BUDGET BALANCE |
|---|---|---|---|---|---|
| REVENUES | | | | | |
| TID #3 - East Side | | | | | |
| Taxes (or Utility Rev.) | 2,382,170.48 | 82,730.87 | 738,992.31 | 31.02 | 1,643,178.17 |
| Specials (Utility Rev.) | 0.00 | 0.00 | 0.00 | 0.00 | 0.00 |
| Intergovernmental | 44,870.73 | 0.00 | 0.00 | 0.00 | 44,870.73 |
| TOTAL TID #3 - East Side | 2,427,041.21 | 82,730.87 | 738,992.31 | 30.45 | 1,688,048.90 |
| TID #3 -Festival Grounds | | | | | |
| Taxes (or Utility Rev.) | 300,000.00 | 0.00 | 0.00 | 0.00 | 300,000.00 |
| TOTAL TID #3 -Festival Grounds | 300,000.00 | 0.00 | 0.00 | 0.00 | 300,000.00 |
| TID #3 - Idle Sites Grant | | | | | |
| Taxes (or Utility Rev.) | 500,000.00 | 0.00 | 0.00 | 0.00 | 500,000.00 |
| Miscellaneous Revenues | 248,500.00 | 0.00 | 0.00 | 0.00 | 248,500.00 |
| TOTAL TID #3 - Idle Sites Grant | 748,500.00 | 0.00 | 0.00 | 0.00 | 748,500.00 |
| TOTAL REVENUE | 3,475,541.21 | 82,730.87 | 738,992.31 | 21.26 | 2,736,548.90 |
| EXPENDITURES | | | | | |
| TID #3 - East Side | | | | | |
| Personnel Services | 24,975.00 | 0.00 | 0.00 | 0.00 | 24,975.00 |
| Contractual Services | 21,150.00 | 1,840.00 | 1,840.00 | 8.70 | 19,310.00 |
| Special Services | 190,000.00 | 0.00 | 0.00 | 0.00 | 190,000.00 |
| Fixed Charges | 537,877.00 | 4,334.25 | 4,334.25 | 0.81 | 533,542.75 |
| Capital Outlay | 1,467,500.00 | 0.00 | 0.00 | 0.00 | 1,467,500.00 |
| Transfers | 204,364.00 | 0.00 | 0.00 | 0.00 | 204,364.00 |
| TOTAL TID #3 - East Side | 2,445,866.00 | 6,174.25 | 6,174.25 | 0.25 | 2,439,691.75 |
| TID #3 -Festival Grounds | | | | | |
| Personnel Services | 11,000.00 | 0.00 | 0.00 | 0.00 | 11,000.00 |
| Contractual Services | 0.00 | 0.00 | 0.00 | 0.00 | 0.00 |
| Capital Outlay | 289,000.00 | 0.00 | 0.00 | 0.00 | 289,000.00 |
| TOTAL TID #3 -Festival Grounds | 300,000.00 | 0.00 | 0.00 | 0.00 | 300,000.00 |
| TID #3 - Idle Sites Grant | | | | | |
| Capital Outlay | 748,500.00 | 0.00 | 0.00 | 0.00 | 748,500.00 |
| TOTAL TID #3 - Idle Sites Grant | 748,500.00 | 0.00 | 0.00 | 0.00 | 748,500.00 |
| TOTAL EXPENDITURES | 3,494,366.00 | 6,174.25 | 6,174.25 | 0.18 | 3,488,191.75 |
| REVENUES OVER/(UNDER) EXPENDITURES | ( 18,824.79) | 76,556.62 | 732,818.06 | 0.00 | ( 751,642.85) |

Attachment: Revenue & Expense - March 2019 (4075 : Revenue & Expense Report for Period Ending March 31, 2019)

REVENUE & EXPENSE REPORT (UNAUDITED)

AS OF: MARCH 31ST, 2019

44 -TID #4 - Thielman/P Ridge

| SUMMARY | ANNUAL BUDGET | CURRENT PERIOD | Y-T-D ACTUAL | % OF BUDGET | BUDGET BALANCE |
|---|---|---|---|---|---|
| **REVENUES** | | | | | |
| TID #4 -Thielman/P Ridge | | | | | |
| Taxes (or Utility Rev.) | 646,852.29 | 0.00 | 0.00 | 0.00 | 646,852.29 |
| Intergovernmental | 23,535.33 | 0.00 | 0.00 | 0.00 | 23,535.33 |
| TOTAL TID #4 -Thielman/P Ridge | 670,387.62 | 0.00 | 0.00 | 0.00 | 670,387.62 |
| TOTAL REVENUE | 670,387.62 | 0.00 | 0.00 | 0.00 | 670,387.62 |
| **EXPENDITURES** | | | | | |
| TID #4 -Thielman/P Ridge | | | | | |
| Personnel Services | 10,975.00 | 0.00 | 0.00 | 0.00 | 10,975.00 |
| Contractual Services | 9,900.00 | 1,650.00 | 1,650.00 | 16.67 | 8,250.00 |
| Special Services | 25,350.00 | 0.00 | 0.00 | 0.00 | 25,350.00 |
| Fixed Charges | 101,409.80 | 3,300.00 | 3,300.00 | 3.25 | 98,109.80 |
| Capital Outlay | 407,500.00 | 0.00 | 0.00 | 0.00 | 407,500.00 |
| Transfers | 0.00 | 0.00 | 0.00 | 0.00 | 0.00 |
| TOTAL TID #4 -Thielman/P Ridge | 555,134.80 | 4,950.00 | 4,950.00 | 0.89 | 550,184.80 |
| TOTAL EXPENDITURES | 555,134.80 | 4,950.00 | 4,950.00 | 0.89 | 550,184.80 |
| REVENUES OVER/(UNDER) EXPENDITURES | 115,252.82 | ( 4,950.00) | ( 4,950.00) | 0.00 | 120,202.82 |

*** END OF REPORT ***

Attachment: Revenue & Expense - March 2019 (4075 : Revenue & Expense Report for Period Ending March 31, 2019)

REVENUE & EXPENSE REPORT (UNAUDITED)

AS OF: MARCH 31ST, 2019

45 -TID #5 - Hwy 107/Taylor

| SUMMARY | ANNUAL BUDGET | CURRENT PERIOD | Y-T-D ACTUAL | % OF BUDGET | BUDGET BALANCE |
|---|---|---|---|---|---|
| **REVENUES** | | | | | |
| TID #5 - Hwy 107/Taylor | | | | | |
| Taxes (or Utility Rev.) | 17,644.52 | 0.00 | 0.00 | 0.00 | 17,644.52 |
| Intergovernmental | 345.51 | 0.00 | 0.00 | 0.00 | 345.51 |
| TOTAL TID #5 - Hwy 107/Taylor | 17,990.03 | 0.00 | 0.00 | 0.00 | 17,990.03 |
| TOTAL REVENUE | 17,990.03 | 0.00 | 0.00 | 0.00 | 17,990.03 |
| **EXPENDITURES** | | | | | |
| TID #5 - Hwy 107/Taylor | | | | | |
| Personnel Services | 1,645.00 | 0.00 | 0.00 | 0.00 | 1,645.00 |
| Contractual Services | 650.00 | 150.00 | 150.00 | 23.08 | 500.00 |
| Special Services | 0.00 | 0.00 | 0.00 | 0.00 | 0.00 |
| Fixed Charges | 2,484.63 | 0.00 | 0.00 | 0.00 | 2,484.63 |
| Capital Outlay | 5,000.00 | 0.00 | 0.00 | 0.00 | 5,000.00 |
| TOTAL TID #5 - Hwy 107/Taylor | 9,779.63 | 150.00 | 150.00 | 1.53 | 9,629.63 |
| TOTAL EXPENDITURES | 9,779.63 | 150.00 | 150.00 | 1.53 | 9,629.63 |
| REVENUES OVER/(UNDER) EXPENDITURES | 8,210.40 | ( 150.00) | ( 150.00) | 0.00 | 8,360.40 |

*** END OF REPORT ***

Attachment: Revenue & Expense - March 2019 (4075 : Revenue & Expense Report for Period Ending March 31, 2019)

REVENUE & EXPENSE REPORT (UNAUDITED)

AS OF: MARCH 31ST, 2019

46 -TID #6 - Downtown

| SUMMARY | ANNUAL BUDGET | CURRENT PERIOD | Y-T-D ACTUAL | % OF BUDGET | BUDGET BALANCE |
|---|---|---|---|---|---|
| **REVENUES** | | | | | |
| TID #6 - Downtown | | | | | |
| Taxes (or Utility Rev.) | 32,862.52 | 0.00 | 0.00 | 0.00 | 32,862.52 |
| Intergovernmental | 2,775.00 | 0.00 | 0.00 | 0.00 | 2,775.00 |
| Miscellaneous Revenues | 64,461.00 | 0.00 | 0.00 | 0.00 | 64,461.00 |
| TOTAL TID #6 - Downtown | 100,098.52 | 0.00 | 0.00 | 0.00 | 100,098.52 |
| TOTAL REVENUE | 100,098.52 | 0.00 | 0.00 | 0.00 | 100,098.52 |
| **EXPENDITURES** | | | | | |
| TID #6 - Downtown | | | | | |
| Personnel Services | 2,985.00 | 0.00 | 0.00 | 0.00 | 2,985.00 |
| Contractual Services | 6,150.00 | 650.00 | 650.00 | 10.57 | 5,500.00 |
| Special Services | 55,000.00 | 0.00 | 0.00 | 0.00 | 55,000.00 |
| Fixed Charges | 33,601.40 | 1,495.83 | 1,495.83 | 4.45 | 32,105.57 |
| Capital Outlay | 2,500.00 | 0.00 | 0.00 | 0.00 | 2,500.00 |
| TOTAL TID #6 - Downtown | 100,236.40 | 2,145.83 | 2,145.83 | 2.14 | 98,090.57 |
| TOTAL EXPENDITURES | 100,236.40 | 2,145.83 | 2,145.83 | 2.14 | 98,090.57 |
| REVENUES OVER/(UNDER) EXPENDITURES | ( 137.88) | ( 2,145.83) | ( 2,145.83) | 0.00 | 2,007.95 |

*** END OF REPORT ***

Attachment: Revenue & Expense - March 2019 (4075 : Revenue & Expense Report for Period Ending March 31, 2019)

REVENUE & EXPENSE REPORT (UNAUDITED)

AS OF: MARCH 31ST, 2019

47 -TID #7 - N Center Ave

| SUMMARY | ANNUAL BUDGET | CURRENT PERIOD | Y-T-D ACTUAL | % OF BUDGET | BUDGET BALANCE |
|---|---|---|---|---|---|
| **REVENUES** | | | | | |
| **TID #7 - N Center Ave** | | | | | |
| Taxes (or Utility Rev.) | 0.00 | 0.00 | 0.00 | 0.00 | 0.00 |
| Intergovernmental | 1,450.00 | 0.00 | 0.00 | 0.00 | 1,450.00 |
| Miscellaneous Revenues | 37,471.00 | 0.00 | 0.00 | 0.00 | 37,471.00 |
| TOTAL TID #7 - N Center Ave | 38,921.00 | 0.00 | 0.00 | 0.00 | 38,921.00 |
| TOTAL REVENUE | 38,921.00 | 0.00 | 0.00 | 0.00 | 38,921.00 |
| **EXPENDITURES** | | | | | |
| **TID #7 - N Center Ave** | | | | | |
| Personnel Services | 2,110.00 | 0.00 | 3,061.20 | 145.08 | ( 951.20) |
| Contractual Services | 900.00 | 650.00 | 650.00 | 72.22 | 250.00 |
| Special Services | 20,000.00 | 0.00 | 0.00 | 0.00 | 20,000.00 |
| Fixed Charges | 13,411.33 | 2,587.50 | 2,587.50 | 19.29 | 10,823.83 |
| Capital Outlay | 2,500.00 | 0.00 | 1,827.94 | 73.12 | 672.06 |
| TOTAL TID #7 - N Center Ave | 38,921.33 | 3,237.50 | 8,126.64 | 20.88 | 30,794.69 |
| TOTAL EXPENDITURES | 38,921.33 | 3,237.50 | 8,126.64 | 20.88 | 30,794.69 |
| REVENUES OVER/(UNDER) EXPENDITURES | ( 0.33) | ( 3,237.50) | ( 8,126.64) | 0.00 | 8,126.31 |

*** END OF REPORT ***

Attachment: Revenue & Expense - March 2019 (4075 : Revenue & Expense Report for Period Ending March 31, 2019)

REVENUE & EXPENSE REPORT (UNAUDITED)

AS OF: MARCH 31ST, 2019

48 -TID #8 - West Side

| SUMMARY | ANNUAL BUDGET | CURRENT PERIOD | Y-T-D ACTUAL | % OF BUDGET | BUDGET BALANCE |
|---|---|---|---|---|---|
| REVENUES | | | | | |
| TID #8 - West Side | | | | | |
| Taxes (or Utility Rev.) | 20,220.94 | 0.00 | 0.00 | 0.00 | 20,220.94 |
| Intergovernmental | 3,500.00 | 0.00 | 0.00 | 0.00 | 3,500.00 |
| Public Charges-Services | 0.00 | 0.00 | 0.00 | 0.00 | 0.00 |
| Miscellaneous Revenues | 102,452.00 | 0.00 | 0.00 | 0.00 | 102,452.00 |
| TOTAL TID #8 - West Side | 126,172.94 | 0.00 | 0.00 | 0.00 | 126,172.94 |
| TOTAL REVENUE | 126,172.94 | 0.00 | 0.00 | 0.00 | 126,172.94 |
| EXPENDITURES | | | | | |
| TID #8 - West Side | | | | | |
| Personnel Services | 4,205.00 | 0.00 | 0.00 | 0.00 | 4,205.00 |
| Contractual Services | 7,400.00 | 1,150.00 | 1,150.00 | 15.54 | 6,250.00 |
| Special Services | 63,000.00 | 0.00 | 0.00 | 0.00 | 63,000.00 |
| Fixed Charges | 48,846.78 | 3,000.00 | 3,000.00 | 6.14 | 45,846.78 |
| Capital Outlay | 2,500.00 | 0.00 | 0.00 | 0.00 | 2,500.00 |
| TOTAL TID #8 - West Side | 125,951.78 | 4,150.00 | 4,150.00 | 3.29 | 121,801.78 |
| TOTAL EXPENDITURES | 125,951.78 | 4,150.00 | 4,150.00 | 3.29 | 121,801.78 |
| REVENUES OVER/(UNDER) EXPENDITURES | 221.16 | ( 4,150.00) | ( 4,150.00) | 0.00 | 4,371.16 |

*** END OF REPORT ***

Attachment: Revenue & Expense - March 2019 (4075 : Revenue & Expense Report for Period Ending March 31, 2019)

REVENUE & EXPENSE REPORT (UNAUDITED)

AS OF: MARCH 31ST, 2019

49 -TID#9 -WI River/S Center

| SUMMARY | ANNUAL BUDGET | CURRENT PERIOD | Y-T-D ACTUAL | % OF BUDGET | BUDGET BALANCE |
|---|---|---|---|---|---|
| **REVENUES** | | | | | |
| TID #9-WI River/S Center | | | | | |
| Taxes (or Utility Rev.) | 0.00 | 0.00 | 0.00 | 0.00 | 0.00 |
| Intergovernmental | 4,750.00 | 0.00 | 0.00 | 0.00 | 4,750.00 |
| Public Charges-Services | 0.00 | 0.00 | 0.00 | 0.00 | 0.00 |
| Miscellaneous Revenues | 0.00 | 234.96 | 704.88 | 0.00 | ( 704.88) |
| TOTAL TID #9-WI River/S Center | 4,750.00 | 234.96 | 704.88 | 14.84 | 4,045.12 |
| TID #9-Idle Sites (Page) | | | | | |
| Taxes (or Utility Rev.) | 0.00 | 0.00 | 0.00 | 0.00 | 0.00 |
| Miscellaneous Revenues | 0.00 | 0.00 | 0.00 | 0.00 | 0.00 |
| TOTAL TID #9-Idle Sites (Page) | 0.00 | 0.00 | 0.00 | 0.00 | 0.00 |
| TOTAL REVENUE | 4,750.00 | 234.96 | 704.88 | 14.84 | 4,045.12 |
| **EXPENDITURES** | | | | | |
| TID #9-WI River/S Center | | | | | |
| Personnel Services | 5,575.00 | 0.00 | 0.00 | 0.00 | 5,575.00 |
| Contractual Services | 9,700.00 | 650.00 | 650.00 | 6.70 | 9,050.00 |
| Special Services | 25,000.00 | 0.00 | 0.00 | 0.00 | 25,000.00 |
| Fixed Charges | 18,950.00 | 4,475.00 | 4,475.00 | 23.61 | 14,475.00 |
| Capital Outlay | 2,500.00 | 0.00 | 0.00 | 0.00 | 2,500.00 |
| TOTAL TID #9-WI River/S Center | 61,725.00 | 5,125.00 | 5,125.00 | 8.30 | 56,600.00 |
| TID #9-Idle Sites (Page) | | | | | |
| Capital Outlay | 0.00 | 0.00 | 0.00 | 0.00 | 0.00 |
| TOTAL TID #9-Idle Sites (Page) | 0.00 | 0.00 | 0.00 | 0.00 | 0.00 |
| TOTAL EXPENDITURES | 61,725.00 | 5,125.00 | 5,125.00 | 8.30 | 56,600.00 |
| REVENUES OVER/(UNDER) EXPENDITURES | ( 56,975.00) | ( 4,890.04) | ( 4,420.12) | 0.00 | ( 52,554.88) |

*** END OF REPORT ***

*** END OF REPORT ***

Attachment: Revenue & Expense - March 2019 (4075 : Revenue & Expense Report for Period Ending March 31, 2019)

REVENUE & EXPENSE REPORT (UNAUDITED)

AS OF: MARCH 31ST, 2019

62 -Water Fund

| SUMMARY | ANNUAL BUDGET | CURRENT PERIOD | Y-T-D ACTUAL | % OF BUDGET | BUDGET BALANCE |
|---|---|---|---|---|---|
| **REVENUES** | | | | | |
| Non-Departmental | | | | | |
| Taxes (or Utility Rev.) | 105,301.00 | 10,642.24 | 24,083.37 | 22.87 | 81,217.63 |
| Specials (Utility Rev.) | ( 1,438.00) | 0.00 | 0.00 | 0.00 | ( 1,438.00) |
| Public Charges-Services | 1,453,410.00 | 134,338.81 | 362,591.48 | 24.95 | 1,090,818.52 |
| Intergov Charges (Misc.) | 20,775.00 | 544.71 | 2,670.38 | 12.85 | 18,104.62 |
| Miscellaneous Revenues | 4,000.00 | 974.44 | 2,813.48 | 70.34 | 1,186.52 |
| Other Financing Sources | 0.00 | 0.00 | 0.00 | 0.00 | 0.00 |
| TOTAL Non-Departmental | 1,582,048.00 | 146,500.20 | 392,158.71 | 24.79 | 1,189,889.29 |
| TOTAL REVENUE | 1,582,048.00 | 146,500.20 | 392,158.71 | 24.79 | 1,189,889.29 |
| **EXPENDITURES** | | | | | |
| Non-Departmental | | | | | |
| Work Orders - Utility | 285,000.00 | 0.00 | 0.00 | 0.00 | 285,000.00 |
| TOTAL Non-Departmental | 285,000.00 | 0.00 | 0.00 | 0.00 | 285,000.00 |
| Pumping Expenses | | | | | |
| | 79,750.00 | 1,248.46 | 13,518.80 | 16.95 | 66,231.20 |
| TOTAL Pumping Expenses | 79,750.00 | 1,248.46 | 13,518.80 | 16.95 | 66,231.20 |
| Water Treatment Expenses | | | | | |
| | 62,000.00 | 1,335.76 | 13,699.64 | 22.10 | 48,300.36 |
| TOTAL Water Treatment Expenses | 62,000.00 | 1,335.76 | 13,699.64 | 22.10 | 48,300.36 |
| Trans & Distribution Exp | | | | | |
| | 257,250.00 | 15,106.86 | 60,023.02 | 23.33 | 197,226.98 |
| TOTAL Trans & Distribution Exp | 257,250.00 | 15,106.86 | 60,023.02 | 23.33 | 197,226.98 |
| Customer Accts Expenses | | | | | |
| | 84,000.00 | 6,706.41 | 20,681.64 | 24.62 | 63,318.36 |
| TOTAL Customer Accts Expenses | 84,000.00 | 6,706.41 | 20,681.64 | 24.62 | 63,318.36 |
| Admin & General Expenses | | | | | |
| | 741,706.00 | 24,634.43 | 85,346.48 | 11.51 | 656,359.52 |
| TOTAL Admin & General Expenses | 741,706.00 | 24,634.43 | 85,346.48 | 11.51 | 656,359.52 |
| Contract Work | | | | | |
| | 3,500.00 | 0.00 | 0.00 | 0.00 | 3,500.00 |
| TOTAL Contract Work | 3,500.00 | 0.00 | 0.00 | 0.00 | 3,500.00 |

Attachment: Revenue & Expense - March 2019 (4075 : Revenue & Expense Report for Period Ending March 31, 2019)

REVENUE & EXPENSE REPORT (UNAUDITED)

AS OF: MARCH 31ST, 2019

62 -Water Fund

| SUMMARY | ANNUAL BUDGET | CURRENT PERIOD | Y-T-D ACTUAL | % OF BUDGET | BUDGET BALANCE |
|---|---|---|---|---|---|
| **Taxes** | | | | | |
| | 391,500.00 | 13,036.52 | 381,336.19 | 97.40 | 10,163.81 |
| TOTAL Taxes | 391,500.00 | 13,036.52 | 381,336.19 | 97.40 | 10,163.81 |
| **Debt Service** | | | | | |
| | 25,019.00 | 0.00 | 274.57 | 1.10 | 24,744.43 |
| TOTAL Debt Service | 25,019.00 | 0.00 | 274.57 | 1.10 | 24,744.43 |
| TOTAL EXPENDITURES | 1,929,725.00 | 62,068.44 | 574,880.34 | 29.79 | 1,354,844.66 |
| REVENUES OVER/(UNDER) EXPENDITURES | ( 347,677.00) | 84,431.76 | ( 182,721.63) | 0.00 | ( 164,955.37) |

*** END OF REPORT ***

Attachment: Revenue & Expense - March 2019 (4075 : Revenue & Expense Report for Period Ending March 31, 2019)

REVENUE & EXPENSE REPORT (UNAUDITED)

AS OF: MARCH 31ST, 2019

63 -Sewer Fund

| SUMMARY | ANNUAL BUDGET | CURRENT PERIOD | Y-T-D ACTUAL | % OF BUDGET | BUDGET BALANCE |
|---|---|---|---|---|---|
| **REVENUES** | | | | | |
| **Non-Departmental** | | | | | |
| Taxes (or Utility Rev.) | 10,000.00 | 1,814.69 | 5,159.98 | 51.60 | 4,840.02 |
| Specials (Utility Rev.) | 0.00 | 0.00 | 0.00 | 0.00 | 0.00 |
| Intergov Charges (Misc.) | 9,000.00 | 411.21 | 1,398.82 | 15.54 | 7,601.18 |
| Miscellaneous Revenues | 2,775.00 | 300.00 | 1,122.41 | 40.45 | 1,652.59 |
| Other Financing Sources | 0.00 | 0.00 | 0.00 | 0.00 | 0.00 |
| Public Charges-Services | 1,484,000.00 | 158,082.50 | 373,363.26 | 25.16 | 1,110,636.74 |
| Other Charges-Services | 110,000.00 | 8,935.81 | 19,069.48 | 17.34 | 90,930.52 |
| TOTAL Non-Departmental | 1,615,775.00 | 169,544.21 | 400,113.95 | 24.76 | 1,215,661.05 |
| TOTAL REVENUE | 1,615,775.00 | 169,544.21 | 400,113.95 | 24.76 | 1,215,661.05 |
| **EXPENDITURES** | | | | | |
| **Non-Departmental** | | | | | |
| Work Orders - Utility | 390,500.00 | 0.00 | 75,920.27 | 19.44 | 314,579.73 |
| TOTAL Non-Departmental | 390,500.00 | 0.00 | 75,920.27 | 19.44 | 314,579.73 |
| **Contract Work** | | | | | |
| | 500.00 | 420.54 | 596.54 | 119.31 | ( 96.54) |
| TOTAL Contract Work | 500.00 | 420.54 | 596.54 | 119.31 | ( 96.54) |
| **Taxes - SS/Medicare** | | | | | |
| | 33,500.00 | 2,347.42 | 7,319.89 | 21.85 | 26,180.11 |
| TOTAL Taxes - SS/Medicare | 33,500.00 | 2,347.42 | 7,319.89 | 21.85 | 26,180.11 |
| **Operations** | | | | | |
| | 276,250.00 | 9,545.53 | 54,454.80 | 19.71 | 221,795.20 |
| TOTAL Operations | 276,250.00 | 9,545.53 | 54,454.80 | 19.71 | 221,795.20 |
| **Maintenance** | | | | | |
| | 273,072.00 | 10,517.37 | 47,885.72 | 17.54 | 225,186.28 |
| TOTAL Maintenance | 273,072.00 | 10,517.37 | 47,885.72 | 17.54 | 225,186.28 |
| **Customer Accts Expenses** | | | | | |
| | 100,500.00 | 6,985.62 | 22,272.05 | 22.16 | 78,227.95 |
| TOTAL Customer Accts Expenses | 100,500.00 | 6,985.62 | 22,272.05 | 22.16 | 78,227.95 |

Attachment: Revenue & Expense - March 2019 (4075 : Revenue & Expense Report for Period Ending March 31, 2019)

REVENUE & EXPENSE REPORT (UNAUDITED)

AS OF: MARCH 31ST, 2019

63 -Sewer Fund

| SUMMARY | ANNUAL BUDGET | CURRENT PERIOD | Y-T-D ACTUAL | % OF BUDGET | BUDGET BALANCE |
|---|---|---|---|---|---|
| **Admin & General Expenses** | | | | | |
| | 451,150.00 | 22,436.69 | 76,360.35 | 16.93 | 374,789.65 |
| TOTAL Admin & General Expenses | 451,150.00 | 22,436.69 | 76,360.35 | 16.93 | 374,789.65 |
| **Taxes & Depreciation** | | | | | |
| | 286,000.00 | 0.00 | 0.00 | 0.00 | 286,000.00 |
| TOTAL Taxes & Depreciation | 286,000.00 | 0.00 | 0.00 | 0.00 | 286,000.00 |
| **Transfers** | | | | | |
| | 2,750.00 | 399.75 | 1,338.28 | 48.66 | 1,411.72 |
| TOTAL Transfers | 2,750.00 | 399.75 | 1,338.28 | 48.66 | 1,411.72 |
| TOTAL EXPENDITURES | 1,814,222.00 | 52,652.92 | 286,147.90 | 15.77 | 1,528,074.10 |
| REVENUES OVER/(UNDER) EXPENDITURES | ( 198,447.00) | 116,891.29 | 113,966.05 | 0.00 | ( 312,413.05) |

*** END OF REPORT ***

Attachment: Revenue & Expense - March 2019 (4075 : Revenue & Expense Report for Period Ending March 31, 2019)

Form SL-304

# 2018 Room Tax Report

Wi Dept of Revenue

## Municipality

| Co-muni code | Municipality | County | Due date | Report type |
|---|---|---|---|---|
| 35251 | CITY OF MERRILL | LINCOLN | May 1, 2019 | ORIGINAL |

## Section A: Room Tax Collection

| | |
|---|---|
| 1. Room tax collected in 2018 | $88,788 |
| 2. Room tax rate imposed as of December 31, 2018 | 6.00 % |
| 3. Did your municipality change your room tax rate during 2018? | No |
| 4. If yes above, provide your municiplaity's prior room tax rate | % |

## Section B: Room Tax Revenue Distributions

| | |
|---|---|
| 1. During 2018, did your municipality forward room tax revenues to a tourism entity or commission for tourism development? | Yes |

2. List each tourism entity and commission that received room tax revenues from your municipality

| Tourism Entity or Commission | Revenues Distributed to Entity or Commission |
|---|---|
| 1. Merrill Tourism Commission | $62,152 |

## Section C: Tourism Entity/Commission Members

For each tourism entity and commission reported in Section B, you must provide member information including any related business entities.

- For a tourism commission - list each member
- For a tourism entity - list each member of its governing body
- Related business entity - includes a business the member owns, operates or is employed by. Select "None" to indicate the member has no related business entity.

**1. Merrill Tourism Commission**

| First Name | Last Name | Related Business Entity |
|---|---|---|
| Dave | Sukow | None |
| Dan | Wendorf | None |
| Jim | Arndt | Les & Jim's |
| Ernie | Stender | AmericInn Hotel |

Attachment: Room Tax - SL-304 (4076 : 2018 Room Tax Reports)

Form SL-304

# 2018 Room Tax Report

WI Dept of Revenue

## Section D: Tourism Promotion/Development Expenditures

1. Of the room tax revenue forwarded for tourism promotion and tourism development, report all expenditures of $1,000 or more made by a tourism commission and tourism entity.

To report your expenditures, you must:
- Attach an expenditure report as a PDF, and/or
- Enter each expenditure below

Note: These expenditures are provided to your municipality by a tourism entity and tourism commission.

| Date | Recipient Name | Amount | Description (optional) |
|---|---|---|---|
| 01/09/2018 | Merrill Chamber | $5,000 | Administration Fee - 50% |
| 05/25/2018 | Merrill Chamber | $1,680 | Tourism Website Portion |
| 06/29/2018 | Merrill Chamber | $5,000 | Administration Fee - 50% |
| 06/29/2018 | Close Publications | $1,000 | Marketing Book Ad - Full Page |
| 07/02/2018 | Merrill Ice Drags | $1,750 | Marketing Grant |
| 07/16/2018 | WI Pro Rodeo Association | $4,500 | Marketing Grant |
| 10/26/2018 | Creative Concepts | $1,500 | Marketing Ads - 2019 |
| 11/05/2018 | City of Merrill | $1,521 | Barleyfest Marketing Grant |
| 11/28/2018 | Merrill Chamber | $1,100 | Pork in the Park Marketing Grant |
| 12/12/2018 | Close Publications | $1,000 | Marketing Ads - 2019 |

**Attachments:**

## Section E: 1994 Documentation

| | |
|---|---|
| 1. Did your municipality collect room tax on May 13, 1994? | No |
| 2. You must attach (PDF files), unless provided in a prior year: | |
| Room tax ordinance in effect on May 13, 1994 | |
| Municipality's financial statement closest to May 13, 1994 showing the percentage of room tax revenues retained by the municipality for purposes other than tourism promotion and development | |

Attachment: Room Tax - SL-304 (4076 : 2018 Room Tax Reports)

Form SL-304

# 2018 Room Tax Report

WI Dept of Revenue

## Preparer/Contact Information

| Preparer name | Preparer title | Preparer phone | Preparer email |
|---|---|---|---|
| Kathy Unertl | Finance Director | (715) 536-5594 | Akathy.unertl@ci.merrill.wi.us |

## Contact Information

| Contact name | Contact title | Contact phone | Contact email |
|---|---|---|---|
| Kathy Unertl | Finance Director | (715) 536-5594 | Akathy.unertl@ci.merrill.wi.us |

## Comments

## Submission Information

You successfully submitted your report. Save and/or print a copy for your records.

Co-muni code: 35251

Submission date: 04-03-2019 08:11 PM

Confirmation: RT20180929O1554340313471

Submission type: ORIGINAL

Attachment: Room Tax - SL-304 (4076 : 2018 Room Tax Reports)

REVENUE & EXPENSE REPORT (UNAUDITED)

AS OF: DECEMBER 31ST, 2018

24 -Merrill Festival Grounds

Room Tax

| | ANNUAL BUDGET | CURRENT PERIOD | Y-T-D ACTUAL | % OF BUDGET | BUDGET BALANCE |
|---|---|---|---|---|---|
| REVENUES | | | | | |
| ======== | | | | | |
| Taxes (or Utility Rev.) | | | | | |
| 45304-41210 Room Tax | 95,000.00 | 18,408.89 | 88,788.50 | 93.46 | 6,211.50 |
| TOTAL Taxes (or Utility Rev.) | 95,000.00 | 18,408.89 | 88,788.50 | 93.46 | 6,211.50 |
| TOTAL REVENUES | 95,000.00 | 18,408.89 | 88,788.50 | 93.46 | 6,211.50 |
| EXPENDITURES | | | | | |
| ========== | | | | | |
| Supplies & Expenses | | | | | |
| 55304-03-41000 MARC - PR/Marketing | 8,050.00 | 2,877.49 | 7,524.46 | 93.47 | 525.54 |
| 55304-03-50000 Tourism Committee-Chamber | 66,500.00 | 23,768.07 | 62,151.95 | 93.46 | 4,348.05 |
| TOTAL Supplies & Expenses | 74,550.00 | 26,645.56 | 69,676.41 | 93.46 | 4,873.59 |
| TOTAL EXPENDITURES | 74,550.00 | 26,645.56 | 69,676.41 | 93.46 | 4,873.59 |
| REVENUES OVER/(UNDER) EXPENDITURES | 20,450.00 | ( 8,236.67) | 19,112.09 | 0.00 | 1,337.91 |

Attachment: Room Tax - SL-304 (4076 : 2018 Room Tax Reports)

**Tourism Report**
**January 1, 2018 – December 31, 2018**

Once again, we have been very aggressive with marketing. We increased the number of guides and magazines that we advertise in for 2018 and increased our capacity for bigger ads in some publications. Those include Fun in Wisconsin Magazine – 2 times per year, Wisconsin Journeys Magazine - quarterly, Harley Dealers Go Guide - annually, Snowmobile & ATV Guide - seasonally, Biking Wisconsin Guide - annually, Fall Ride Guide - annually, Chicago Daily Herald – 2 times a year, Daily Herald (Chicago land) – 2 times year, Motorcycle Map - annually, Antigo Activity Guides - seasonally, Harley Motorcycle Map - annually, the Art Guide Map - annually, JCV website banners for snowmobile/ATV and Travel Wisconsin – seasonally, Up North Magazine – 3 times a year, Lincoln Count Snowmobile Map – annually, Underdown brochure – annually, TREK Guide – annually, Merrill Visitor Guide – annually, and Association of WI Snowmobile Clubs - annually. We also advertised in a number of regional shoppers. We received great placement, opening our regional sections in both the Snowmobile & ATV Guides and the Biking Guide. We also increased our ad to a full-size page in Journey's. We also advertise tourism events on Tomahawk's WJJQ Radio.

Tourism Shows: ITBEC Sport Shows – 2 times a year, Discover Wisconsin and ROKU. Television: Discover Wisconsin – 2009, 2012, 2015, 2016, ROKU 2018. Websites: Travel Wisconsin, Wisconsin Network, Merrill Chamber, WSAU, WAOW, WIFC Calendars, Discover Wisconsin, Northwood's of Wisconsin, Snowtracks, Up North, Local Dirt, Rummage Wisconsin, River Bend Trail, TREK, Fun in Wisconsin, FOX Wausau, Northwoods Fishing, Ass0ciation of WI Snowmobile Clubs, and ITBEC.

The Chamber's web/calendar/events from January thru December received direct inquires of 104,267 compared to 82,479 inquiries for all of 2017. Our Northwoods of Wisconsin website received 1000+ inquires and our ITBEC site received 420 inquiries for 2018, which is higher than the total for 2017.

We have disbursed visitor guides/information to 28,019 individuals thus far compared to 23,925 individuals during the 2017 season. Our information foyer is open 24/7. July through September is the busiest for the hotels but they have been busy year-round. There were a handful of weekends that all the hotels were full at the same time. Factors included area businesses, NTC and of course the variety of tourism related events and activities.

We allocated advertising grants to thirteen events for a total of $17,050 for 2018. Two events did not take place, reducing the grants by $1,850. Our total 2018 expense budget was $50,080.

The 2018 grantees were: Labor Day Car Show, Lincoln Lager Barleyfest, Lincoln County Fair, Concertina Festival, Merrill Airport Day, Wisconsin Pro Rodeo, Wisconsin Pro Rodeo Bullfighting, Dog Sled Races, Gleason Heritage Days, Merrill Ice Draggers, Lobsterfest and Pork in the Park Ribfest. The total amount allocated for grants during the 2018 season was $17,050.00. The tourism budget was approved at $33,030.00 for a total budget of $50,080.00. This was the largest budget in our tourism history until the 2019 budget.

The Tourism Commission met on September 18 to review grant applications and to set the 2019 budget. The commission agreed to fund fifteen events for 2019 in the amount of $21,450 with a total tourism budget of $54,220. The events being funded in 2019 include: Winterfest Dog Sled Races, Merrill Airport Days, Merrill Lion's Labor Day Car Show, Lincoln County Fair, Gleason Heritage Days & Mud Boggs, Wisconsin River Pro Rodeo, Central Wisconsin Concertina Festival, Merrill Ice Drags, Lincoln Lager Barleyfest, Pork in the Park Ribfest, Love Me Tender in Merrill. Lobsterfest, Merrill Tractor Pull and Black Squirrel Scurry Triathlon.

Attachment: Tourism Commission 2018 Report (4077 : 2018 Tourism Report)

The Department of Tourism will release the tourism impact in Lincoln County for 2018 in April. The 2017 Lincoln County impact for 2017 were:

•**Total business sales** in Lincoln County were $87.5 million in 2017, an increase of 2.4% from 2017.
•**708 jobs** with a total personal income of $16.0 were supported by visitors to Lincoln County.
•Visitors to Lincoln County generated $5.7 million in **state and local tax revenue** during 2017.

•**Direct visitor spending** in Lincoln County was $56 million in 2017, an increase of 3.9% from 2016.

Due in part to Merrill Chamber's aggressive marketing; we have seen increases every year for the past eight years in business sales, tax revenue and direct visitor spending. Direct visitor spending over this period:
•$39 million in 2010
•$48.9 million in 2011 and 2012
•$50.72 million in 2013
•$52.8 million in 2014
•$53.2 million in 2015
•$53.8 million in 2016
•$56.0 million in 2017

The Secretary of Tourism visited once in the past 12 months and her Deputy Secretary has been here once. The Governor visited once during 2018. The Secretary came for a day and we toured new Merrill businesses like the Sawmill Brewing Company. We have also taken her to spots that have become her favorites like First Street Coffee Station and Ye Olde Sweet Shoppe.

Most of our largest events and festivals reported high numbers of attendance. Those include the WI River Pro Rodeo, Concertina Festival/Conference, Lincoln County Fair, Airport Days, Pork in the Park and Barleyfest.

In addition, we went to bat for the Merrill Ice Draggers, putting out a lengthy press release citing the economic impact and tourism impact the races have on the Merrill area. It had over 2000+ face page shares in addition to press, with no discernable negative impact. In fact, it brought the four townships together with an agreement to update the ordinance.

Again, we have had a very success 2018 tourism season in Merrill. We will continue an aggressive marketing strategy focusing on advertising that give us the biggest bang for the buck and targeting the visitor 'types' and profiles that are of interest in communities like Merrill and the great Northwood's.

Report by Debbe Kinsey, Tourism Administrator

Attachment: Tourism Commission 2018 Report (4077 : 2018 Tourism Report)

Jackson Street Estimate

| | |
|---|---|
| | 1340 ft |
| | California to Foster |
| 6" DI Water Main | $76,380.00 |
| 10 PVC Sewer Main | $44,220.00 |
| 30" C&G | $40,200.00 |
| Manholes | $5,100.00 |
| Asphalt | $61,875.00 |
| Asph. Removal | $10,000.00 |
| CABC | $22,086.00 |
| Misc | $20,000.00 |
| Traffic Cont. | $2,500.00 |
| Totals | $282,361.00 |

| | |
|---|---|
| N Poplar Street Project | $72,200.00 |
| Court Street Project | $149,000.00 |
| Sidewalk Program | $120,000.00 |
| Total= | $341,200.00 |

Attachment: Jackson Street Estimate (4051 : Discuss condition of Jackson Street (Eugene to Foster Street).)

**City of Merrill**

**M2019-01 East Main Street Project**

**Bid Summary**

| | |
|---|---|
| Budget Estimate | $1,035,000 |

**Bids Received**

| | |
|---|---|
| Merrill Gravel and Construction | $972,097.05 |
| American Asphalt of Wisconsin | $1,030,277.44 |
| Francis Melvin, Inc. | $1,105,246.30 |

Low Bid $62,902.95 below budget estimate

Attachment: M2019-01 Bid Summary Packet (4074 : Consider bids on M2019-01 Main Street (Memorial Drive to Pine Ridge Avenue) Project)

| City of Merrill - Planned Infrastructure Projects - 2019 | | | | | | ROW = Street Right-of-Way | | | |
|---|---|---|---|---|---|---|---|---|---|
| TID No. | Street | From: | To: | Total $ | Curb/Gutter/ Paving | Sidewalk or Path | Streetlighting | Water | Sewer |
| 3 | Thielman St. | Gem St. | Pine Ridge Ave. | $55,000 | | | $55,000 | | |
| 3 | E. Main St. ROW | Memorial Dr. | Sturdevant St. | $35,000 | | $35,000 | Associated Bank to WWT Plant area | | |
| 3 | E. Main St. ROW | WWT Plant | S. Pine Ridge Ave. | $100,000 | | $100,000 | River Bend Trail Extension - 10' Wide | | |
| 3 | E. Main St. | Memorial Dr. | Pine Ridge Intersection | $900,000 | $900,000 | | | | |
| | Area adjacent to River Bend Trail at Cooper St. - Idle Sites Grant for 30%: | | | | | | | | |
| 3 | Logan Ave. | Sales St. | Cooper St. | | | Sidewalk - one block (North Side) & missing ADA corners | | | |
| 3 | Logan Ave. | Sales St. | Cooper St. | | | Water Main & curb, gutter, & paving (1890s water/gravel) | | | |
| 3 | Sturdevant St. | Sales St. | Cooper St. | | | Water Main & curb, gutter, & paving (1890s water/gravel) | | | |
| 3 | Cooper St. | Logan Ave. | Sturdevant St. | | | Sidewalk - one block (West Side) | | | |
| | | | | $120,000 | $120,000 | | | | |
| | | | | | Total for Logan Ave./Sales St./Cooper St. | | | | |
| | | | | $1,210,000 | $1,020,000 | $135,000 | $55,000 | $0 | $0 |

Note: Pavement replacement within Merrill Festival Grounds (and area adjacent to Grandstand) is also planned. Pending grant request for Grandstand area paving.

E Main Street Budget Total = $1,035,000



Revised: 10/23//2018



Attachment: M2019-01 Bid Summary Packet (4074 : Consider bids on M2019-01 Main Street (Memorial

CITY OF MERRILL
M2019-01
SURFACE PROJECT
BID TAB

| ITEM NO. | ITEM | EST. QNTY. | UNIT | UNIT PRICE | TOTAL ITEM AMOUNT |
|---|---|---|---|---|---|
| 1 | Asphalt Binder | 4,900 | Ton | $70.50 | $345,450.00 |
| 2 | Asphalt Surface | 2,320 | Ton | $74.25 | $172,260.00 |
| 3 | Asphalt Trail | 260 | Ton | $102.00 | $26,520.00 |
| 4 | Prep for Asphaltic Trail | 1,575 | LF | $4.75 | $7,481.25 |
| 5 | Crushed Agg Base 1 1/4" Dense | 5,400 | Ton | $8.55 | $46,170.00 |
| 6 | Adjust Existing Manhole Frame | 27 | Each | $485.00 | $13,095.00 |
| 7 | Adjust Existing Valve Boxes | 11 | Each | $92.00 | $1,012.00 |
| 8 | Adjust Existing Catch Basins | 39 | Each | $225.00 | $8,775.00 |
| 9 | 4 Inch Sidewalk | 12,050 | SF | $4.60 | $55,430.00 |
| 10 | Prep for Sidewalk | 2,410 | LF | $2.95 | $7,109.50 |
| 11 | 6 Inch Sidewalk & Driveway | 4,600 | SF | $5.60 | $25,760.00 |
| 12 | Detectable Warning Field (Yellow) | 300 | SF | $44.00 | $13,200.00 |
| 13 | Remove Asphaltic Pavement | 800 | SY | $1.35 | $1,080.00 |
| 14 | Concrete Removal | 22,000 | SY | $2.60 | $57,200.00 |
| 15 | Curb and Gutter Removal | 7,950 | LF | $1.15 | $9,142.50 |
| 16 | 30 Inch Curb and Gutter | 7,950 | LF | $12.50 | $99,375.00 |
| 17 | Saw Cutting Pavement | 950 | LF | $4.00 | $3,800.00 |
| 18 | Common Excavation | 350 | CY | $8.50 | $2,975.00 |
| 19 | Sand Fill | 500 | CY | $10.50 | $5,250.00 |
| 20 | Topsoil, Fertilize, Seed and Mulch | 5,893 | SY | $5.10 | $30,054.30 |
| 21 | Inlet Erosion Protection, Type C | 39 | Each | $70.00 | $2,730.00 |
| 22 | Traffic Control | 1 | LS | $33,000.00 | $33,000.00 |
| 23 | Rib Block Retaining Wall | 80 | LF | $240.00 | $19,200.00 |
| 24 | Silt Fence | 200 | LF | $2.50 | $500.00 |
| | | | | Total= | $986,569.55 |

Attachment: M2019-01 Bid Summary Packet (4074 : Consider bids on M2019-01 Main Street (Memorial Drive to Pine Ridge Avenue) Project)

| | | | | | | | | | | |
|---|---|---|---|---|---|---|---|---|---|---|
| CREDIT OT THE CITY (HAUL TO CONTRACTOR LOCATION) | | | | | | | | | | |
| 1 | | Concrete Removal | | 22,000 | | SY | | $0.60 | | $13,200.00 |
| 2 | | Curb and Gutter Removal | | 7,950 | | LF | | $0.15 | | $1,192.50 |
| 3 | | Remove Asphaltic Pavement | | 800 | | SY | | $0.10 | | $80.00 |
| | | | | | | | | | Total= | $14,472.50 |

Attachment: M2019-01 Bid Summary Packet (4074 : Consider bids on M2019-01 Main Street (Memorial Drive to Pine Ridge Avenue) Project)

| CITY OF MERRILL | | | | | |
|---|---|---|---|---|---|
| M2019-01 | | | | | |
| SURFACE PROJECT | | | | | |
| BID TAB | | | | | |
| ITEM NO. | ITEM | EST. QNTY. | UNIT | UNIT PRICE | TOTAL ITEM AMOUNT |
| 1 | Asphalt Binder | 4,900 | Ton | $70.50 | $ 345,450.00 |
| 2 | Asphalt Surface | 2,320 | Ton | $74.25 | $ 172,260.00 |
| 3 | Asphalt Trail | 260 | Ton | $101.50 | $ 26,390.00 |
| 4 | Prep for Asphaltic Trail | 1,575 | LF | $5.25 | $ 8,268.75 |
| 5 | Crushed Agg Base 1 1/4" Dense | 5,400 | Ton | $9.10 | $ 49,140.00 |
| 6 | Adjust Existing Manhole Frame | 27 | Each | $514.10 | $ 13,880.70 |
| 7 | Adjust Existing Valve Boxes | 11 | Each | $97.55 | $ 1,073.05 |
| 8 | Adjust Existing Catch Basins | 39 | Each | $239.00 | $ 9,321.00 |
| 9 | 4 Inch Sidewalk | 12,050 | SF | $4.80 | $ 57,840.00 |
| 10 | Prep for Sidewalk | 2,410 | LF | $3.15 | $ 7,591.50 |
| 11 | 6 Inch Sidewalk & Driveway | 4,600 | SF | $5.85 | $ 26,910.00 |
| 12 | Detectable Warning Field (Yellow) | 300 | SF | $46.65 | $ 13,995.00 |
| 13 | Remove Asphaltic Pavement | 800 | SY | $1.55 | $ 1,240.00 |
| 14 | Concrete Removal | 22,000 | SY | $2.80 | $ 61,600.00 |
| 15 | Curb and Gutter Removal | 7,950 | LF | $1.25 | $ 9,937.50 |
| 16 | 30 Inch Curb and Gutter | 7,950 | LF | $13.00 | $ 103,350.00 |
| 17 | Saw Cutting Pavement | 950 | LF | $5.00 | $ 4,750.00 |
| 18 | Common Excavation | 350 | CY | $9.05 | $ 3,167.50 |
| 19 | Sand Fill | 500 | CY | $11.15 | $ 5,575.00 |
| 20 | Topsoil, Fertilize, Seed and Mulch | 5,893 | SY | $7.58 | $ 44,668.94 |
| 21 | Inlet Erosion Protection, Type C | 39 | Each | $59.00 | $ 2,301.00 |
| | | | | | $ - |
| 22 | Traffic Control | 1 | LS | $51,000.00 | $ 51,000.00 |
| 23 | Rib Block Retaining Wall | 80 | LF | $305.00 | $ 24,400.00 |
| 24 | Silt Fence | 200 | LF | $3.20 | $ 640.00 |
| | | | | Total = | $ 1,044,749.94 |

Attachment: M2019-01 Bid Summary Packet (4074 : Consider bids on M2019-01 Main Street (Memorial Drive to Pine Ridge Avenue) Project)

| | | | | | | | | | | | |
|---|---|---|---|---|---|---|---|---|---|---|---|
| **CREDIT OT THE CITY (HAUL TO CONTRACTOR LOCATION)** | | | | | | | | | | | |
| 1 | | Concrete Removal | | 22,000 | | SY | | $0.60 | | $ | 13,200.00 |
| | | | | | | | | | | | |
| 2 | | Curb and Gutter Removal | | 7,950 | | LF | | $0.15 | | $ | 1,192.50 |
| | | | | | | | | | | | |
| 3 | | Remove Asphaltic Pavement | | 800 | | SY | | $0.10 | | $ | 80.00 |
| | | | | | | | | | | | |
| | | | | | | | | **Total =** | | **$** | **14,472.50** |

Attachment: M2019-01 Bid Summary Packet (4074 : Consider bids on M2019-01 Main Street (Memorial Drive to Pine Ridge Avenue) Project)

**CITY OF MERRILL**
**M2019-01**
**SURFACE PROJECT**
**BID TAB**

| ITEM NO. | ITEM | EST. ONTY. | UNIT | UNIT PRICE | TOTAL ITEM AMOUNT |
|---|---|---|---|---|---|
| 1 | Asphalt Binder | 4900 | Ton | $73.67 | $360,983.00 |
| 2 | Asphalt Surface | 2320 | Ton | $77.59 | $180,008.80 |
| 3 | Asphalt Trail | 260 | Ton | $105.05 | $27,313.00 |
| 4 | Prep for Asphaltic Trail | 1575 | LF | $4.00 | $6,300.00 |
| 5 | Crushed Agg Base 1 1/4" Dense | 5400 | Ton | $14.25 | $76,950.00 |
| 6 | Adjust Existing Manhole Frame | 27 | Each | $670.95 | $18,115.65 |
| 7 | Adjust Existing Valve Boxes | 11 | Each | $330.00 | $3,630.00 |
| 8 | Adjust Existing Catch Basins | 39 | Each | $450.00 | $17,550.00 |
| 9 | 4 Inch Sidewalk | 12,050 | SF | $4.70 | $56,635.00 |
| 10 | Prep for Sidewalk | 2,410 | LF | $2.30 | $5,543.00 |
| 11 | 6 Inch Sidewalk & Driveway | 4,600 | SF | $5.67 | $26,082.00 |
| 12 | Detectable Warning Field (Yellow) | 300 | SF | $45.00 | $13,500.00 |
| 13 | Remove Asphaltic Pavement | 800 | SY | $2.20 | $1,760.00 |
| 14 | Concrete Removal | 22,000 | SY | $4.00 | $88,000.00 |
| 15 | Curb and Gutter Removal | 7,950 | LF | $1.35 | $10,732.50 |
| 16 | 30 Inch Curb and Gutter | 7,950 | LF | $13.05 | $103,747.50 |
| 17 | Saw Cutting Pavement | 950 | LF | $4.25 | $4,037.50 |
| 18 | Common Excavation | 350 | CY | $15.60 | $5,460.00 |
| 19 | Sand Fill | 500 | CY | $12.75 | $6,375.00 |
| 20 | Topsoil, Fertilize, Seed and Mulch | 5,893 | SY | $5.95 | $35,063.35 |
| 21 | Inlet Erosion Protection, Type C | 39 | Each | $40.00 | $1,560.00 |
| 22 | Traffic Control | 1 | LS | $39,650 | $39,650.00 |
| 23 | Rib Block Retaining Wall | 80 | LF | $197.75 | $15,820.00 |
| 24 | Silt Fence | 200 | LF | $2.15 | $430.00 |
| | | | | Total= | ~~$0.00~~ $1,105,246.30 |

Attachment: M2019-01 Bid Summary Packet (4074 : Consider bids on M2019-01 Main Street (Memorial Drive to Pine Ridge Avenue) Project)

| | | | | | | | | | | |
|---|---|---|---|---|---|---|---|---|---|---|
| CREDIT OT THE CITY (HAUL TO CONTRACTOR LOCATION) | | | | | | | | | | |
| 1 | | Concrete Removal | | 22,000 | | SY | | $0.00 | | $0.00 |
| 2 | | Curb and Gutter Removal | | 7,950 | | LF | | $0.00 | | $0.00 |
| 3 | | Remove Asphaltic Pavement | | 800 | | SY | | $0.00 | | $0.00 |
| | | | | | | | | | Total= | ~~$0.00~~ |
| | | | | | | | | | | $0.00 |

Attachment: M2019-01 Bid Summary Packet (4074 : Consider bids on M2019-01 Main Street (Memorial Drive to Pine Ridge Avenue) Project)

# Original Alcohol Beverage Retail License Application

*Submit to municipal clerk.*

For the license period beginning 4/10 20 19 ;
ending 6/30 20 19

TO THE GOVERNING BODY of the: ☐ Town of ☐ Village of ☒ City of } Merrill

County of Lincoln Aldermanic Dist. No. _____ (if required by ordinance)

| Applicant's WI Seller's Permit No.: 456102646 98603 | FEIN Number: 20-4514387 |
|---|---|
| LICENSE REQUESTED ▶ | |
| TYPE | FEE |
| ☐ Class A beer | $ |
| ☒ Class B beer | $ 25.00 |
| ☐ Class C wine | $ |
| ☐ Class A liquor | $ |
| ☐ Class A liquor (cider only) | $ N/A |
| ☐ Class B liquor | $ |
| ☐ Reserve Class B liquor | $ |
| ☐ Class B (wine only) winery | $ |
| Publication fee | $ 10 - |
| TOTAL FEE | $ 35 - |

1. The named ☐ Individual ☐ Partnership ☑ Limited Liability Company ☐ Corporation / Nonprofit Organization
hereby makes application for the alcohol beverage license(s) checked above.
2. Name (individual/partners give last name, first, middle; corporations/limited liability companies give registered name): ▶ D Swan, LLC
(Mail 809 E 1st St)

An **"Auxiliary Questionnaire," Form AT-103, must be completed and attached to this application by each individual applicant, by each member of a partnership, and by each officer, director and agent of a corporation or nonprofit organization, and by each member/manager and agent of a limited liability company.** List the name, title, and place of residence of each person.

| Title | Name (Last, First, M.I.) | Home Address | Post Office & Zip Code |
|---|---|---|---|
| President/Member | Donald C Swan | 809 E 1st St Merrill, WI | 54452 |
| Vice President/Member | Dawn R. Swan | 809 E 1st St Merrill, WI | 54452 |
| Secretary/Member | | | |
| Treasurer/Member | | | |
| Agent ▶ | Dawn R. Swan | 809 E 1st St Merrill, WI | 54452 |
| Directors/Managers | | | |

3. Trade Name ▶ First Street Coffee Station Business Phone Number (715) 539-3030
4. Address of Premises ▶ 809 E 1st St Post Office & Zip Code ▶ 54452
5. Is individual, partners or agent of corporation/limited liability company subject to completion of the responsible beverage server training course for this license period? ☐ Yes ☑ No
6. Is the applicant an employe or agent of, or acting on behalf of anyone except the named applicant? ☐ Yes ☑ No
7. Does any other alcohol beverage retail licensee or wholesale permittee have any interest in or control of this business? ☐ Yes ☑ No
8. (a) **Corporate/limited liability company applicants only:** Insert state WI and date 2008 of registration.
(b) Is applicant corporation/limited liability company a subsidiary of any other corporation or limited liability company? ☐ Yes ☑ No
(c) Does the corporation, or any officer, director, stockholder or agent or limited liability company, or any member/manager or agent hold any interest in any other alcohol beverage license or permit in Wisconsin? ☐ Yes ☑ No
*(NOTE: All applicants explain fully on reverse side of this form every YES answer in sections 5, 6, 7 and 8 above.)*
9. Premises description: Describe building or buildings where alcohol beverages are to be sold and stored. The applicant must include all rooms including living quarters, if used, for the sales, service, consumption, and/or storage of alcohol beverages and records. (Alcohol beverages may be sold and stored only on the premises described.) Street level of 809 E 1st St (Same as current li
10. Legal description (omit if street address is given above): _____
11. (a) Was this premises licensed for the sale of liquor or beer during the past license year? ☐ Yes ☑ No
(b) If yes, under what name was license issued? _____
12. Does the applicant understand they must register as a Retail Beverage Alcohol Dealer with the federal government, Alcohol and Tobacco Tax and Trade Bureau (TTB) by filing (TTB form 5630.5d) before beginning business? [phone 1-877-882-3277] ☑ Yes ☐ No
13. Does the applicant understand they must hold a Wisconsin Seller's Permit? [phone (608) 266-2776] ☑ Yes ☐ No
14. Does the applicant understand that they must purchase alcohol beverages only from Wisconsin wholesalers, breweries and brewpubs? ☑ Yes ☐ No

**READ CAREFULLY BEFORE SIGNING:** Under penalty provided by law, the applicant states that each of the above questions has been truthfully answered to the best of the knowledge of the signer. Any person who knowingly provides materially false information on this application may be required to forfeit not more than $1,000. Signer agrees to operate this business according to law and that the rights and responsibilities conferred by the license(s), if granted, will not be assigned to another. (Individual applicants, or one member of a partnership applicant must sign; one corporate officer, one member/manager of Limited Liability Companies must sign.) Any lack of access to any portion of a licensed premises during inspection will be deemed a refusal to permit inspection. Such refusal is a misdemeanor and grounds for revocation of this license.

*(Officer of Corporation / Member / Manager of Limited Liability Company / Partner / Individual)*

**TO BE COMPLETED BY CLERK**

| Date received and filed with municipal clerk | Date reported to council / board | Date provisional license issued | Signature of Clerk / Deputy Clerk |
|---|---|---|---|
| 3/18/19 | | | |
| Date license granted | Date license issued | License number issued | |

AT-106 (R. 7-18) Wisconsin Depar

Attachment: First Street Coffee Liq Lic 809 E 1st St adding Class B Beer (4021 : Class B Beer license application for First Street Coffee Station)

456102646986 03

# Original Alcohol Beverage Retail License Application

*Submit to municipal clerk.*

| Applicant's WI Seller's Permit No. | FEIN Number |
|---|---|
| 30 - 45 14387 | |

| LICENSE REQUESTED ▶ | |
|---|---|
| TYPE | FEE |
| ☐ Class A beer | $ |
| ☑ Class B beer | $ 50.00 |
| ☑ Class C wine | $ |
| ☐ Class A liquor | $ |
| ☐ Class A liquor (cider only) | $ N/A |
| ☐ Class B liquor | $ |
| ☐ Reserve Class B liquor | $ |
| ☐ Class B (wine only) winery | $ |
| Publication fee | $ 10.00 |
| TOTAL FEE | $ 60.00 |

For the license period beginning 4/10/ 20 19 ;
ending 6/30 20 19

TO THE GOVERNING BODY of the: ☐ Town of ☐ Village of ☑ City of } Merrill

County of Lincoln Aldermanic Dist. No. _____ (if required by ordinance)

1. The named ☐ Individual ☐ Partnership ☑ Limited Liability Company ☐ Corporation / Nonprofit Organization
hereby makes application for the alcohol beverage license(s) checked above.

2. Name (individual/partners give last name, first, middle; corporations/limited liability companies give registered name): ▶ DSWAN, LLC
*(mail 809 E 1st St)*

An **"Auxiliary Questionnaire," Form AT-103, must be completed and attached to this application by each individual applicant, by each member of a partnership, and by each officer, director and agent of a corporation or nonprofit organization, and by each member/manager and agent of a limited liability company.** List the name, title, and place of residence of each person.

| Title | Name (Last, First, M.I.) | Home Address | Post Office & Zip Code |
|---|---|---|---|
| President/Member | Donald C. Swan | 809 1/2 E. 1st St | Merrill, WI 54452 |
| Vice President/Member | Dawn R. Swan | 809 1/2 E. 1st St | Merrill, WI 54452 |
| Secretary/Member | | | |
| Treasurer/Member | | | |
| Agent ▶ | Dawn R Swan | 809 1/2 E. 1st St | Merrill, WI 54452 |
| Directors/Managers | | | |

3. Trade Name ▶ First Street Coffee Station Business Phone Number (715) 722-0020
4. Address of Premises ▶ 501 South Pine Ridge Ave Post Office & Zip Code ▶ Merrill 54452
5. Is individual, partners or agent of corporation/limited liability company subject to completion of the responsible beverage server training course for this license period? ☐ Yes ☑ No
6. Is the applicant an employe or agent of, or acting on behalf of anyone except the named applicant? ☐ Yes ☑ No
7. Does any other alcohol beverage retail licensee or wholesale permittee have any interest in or control of this business? ☐ Yes ☑ No
8. (a) **Corporate/limited liability company applicants only:** Insert state WI and date 2008 of registration.
(b) Is applicant corporation/limited liability company a subsidiary of any other corporation or limited liability company? ☐ Yes ☑ No
(c) Does the corporation, or any officer, director, stockholder or agent or limited liability company, or any member/manager or agent hold any interest in any other alcohol beverage license or permit in Wisconsin? 809 E. 1st St, Merrill 1st St Coffee ☑ Yes ☐ No
*(NOTE: All applicants explain fully on reverse side of this form every YES answer in sections 5, 6, 7 and 8 above.)*
9. Premises description: Describe building or buildings where alcohol beverages are to be sold and stored. The applicant must include all rooms including living quarters, if used, for the sales, service, consumption, and/or storage of alcohol beverages and records. (Alcohol beverages may be sold and stored only on the premises described.) South east Corner + patio area of bldg located at 501 S. Pine Ridge Ave (se m
10. Legal description (omit if street address is given above): _____
11. (a) Was this premises licensed for the sale of liquor or beer during the past license year? ☐ Yes ☑ No
(b) If yes, under what name was license issued? _____
12. Does the applicant understand they must register as a Retail Beverage Alcohol Dealer with the federal government, Alcohol and Tobacco Tax and Trade Bureau (TTB) by filing (TTB form 5630.5d) before beginning business? [phone 1-877-882-3277] ☑ Yes ☐ No
13. Does the applicant understand they must hold a Wisconsin Seller's Permit? [phone (608) 266-2776] ☑ Yes ☐ No
14. Does the applicant understand that they must purchase alcohol beverages only from Wisconsin wholesalers, breweries and brewpubs? ☑ Yes ☐ No

**READ CAREFULLY BEFORE SIGNING:** Under penalty provided by law, the applicant states that each of the above questions has been truthfully answered to the best of the knowledge of the signer. Any person who knowingly provides materially false information on this application may be required to forfeit not more than $1,000. Signer agrees to operate this business according to law and that the rights and responsibilities conferred by the license(s), if granted, will not be assigned to another. (Individual applicants, or one member of a partnership applicant must sign; one corporate officer, one member/manager of Limited Liability Companies must sign.) Any lack of access to any portion of a licensed premises during inspection will be deemed a refusal to permit inspection. Such refusal is a misdemeanor and grounds for revocation of this license.

x Dawn Swan
*(Officer of Corporation / Member / Manager of Limited Liability Company / Partner / Individual)*

**TO BE COMPLETED BY CLERK**

| Date received and filed with municipal clerk | Date reported to council / board | Date provisional license issued | Signature of Clerk / Deputy Clerk |
|---|---|---|---|
| 3/18/19 | | | |
| Date license granted | Date license issued | License number issued | |

AT-106 (R. 7-18) Wisconsin Department of Revenue

Attachment: First Street Coffee Liq Lic 501 S Pine Ridge Ave (4022 : Class B Beer and Class B Wine application for First Street Coffee Station

$10 fee pd

# SCHEDULE FOR APPOINTMENT OF AGENT BY CORPORATION/NONPROFIT ORGANIZATION OR LIMITED LIABILITY COMPANY

Submit to municipal clerk.

All corporations/organizations or limited liability companies applying for a license to sell fermented malt beverages and/or intoxicating liquor must appoint an agent. The following questions must be answered by the agent. The appointment must be signed by the officer(s) of the corporation/organization or members/managers of a limited liability company and the recommendation made by the proper local official.

To the governing body of: ☐ Town ☐ Village ☒ City of Merrill County of Lincoln

The undersigned duly authorized officer(s)/members/managers of Heartland Cooperative Services (registered name of corporation/organization or limited liability company)

a corporation/organization or limited liability company making application for an alcohol beverage license for a premises known as Merrill Cenex (trade name)

located at 1300 N Center Ave Merrill Wi

appoints Becky Guite (name of appointed agent)

508 Wisconsin St Merrill Wi 54452 (home address of appointed agent)

to act for the corporation/organization/limited liability company with full authority and control of the premises and of all business relative to alcohol beverages conducted therein. Is applicant agent presently acting in that capacity or requesting approval for any corporation/organization/limited liability company having or applying for a beer and/or liquor license for any other location in Wisconsin?

☐ Yes ☒ No If so, indicate the corporate name(s)/limited liability company(ies) and municipality(ies).

Is applicant agent subject to completion of the responsible beverage server training course? ☒ Yes ☐ No

How long immediately prior to making this application has the applicant agent resided continuously in Wisconsin? _____

Place of residence last year _____

For: Heartland Cooperative Services (name of corporation/organization/limited liability company)

By: [signature] (signature of Officer/Member/Manager)

And: _____ (signature of Officer/Member/Manager)

## ACCEPTANCE BY AGENT

I, Becky Guite (print/type agent's name), hereby accept this appointment as agent for the corporation/organization/limited liability company and assume full responsibility for the conduct of all business relative to alcohol beverages conducted on the premises for the corporation/organization/limited liability company.

[signature] (signature of agent) 2-28-2019 (date) Agent's age 38

508 Wisconsin St Merrill (home address of agent) Date of birth 8-11-1980

## APPROVAL OF AGENT BY MUNICIPAL AUTHORITY
**(Clerk cannot sign on behalf of Municipal Official)**

I hereby certify that I have checked municipal and state criminal records. To the best of my knowledge, with the available information, the character, record and reputation are satisfactory and I have no objection to the agent appointed.

Approved on _____ (date) by _____ (signature of proper local official) Title _____ (town chair, village president, police chief)

AT-104 (R. 4-09) Wisconsin Department of Revenue

Attachment: Change of Agent - Heartland Coop Serv (Merrill Cenex) (4020 : Change of Agent Application for Merrill Cenex, Becky Guite)

GridBee®

## Contents


Safety Instructions ..... 1
Package Contents ..... 3
Install Requirements ..... 4
Installation ..... 5
Startup ..... 10
Operation ..... 11
GS-12 Mixer Drawing ..... 13
GS-12 SCADA Option ..... 14
Warranty ..... 17


# GS-12 120v INSTALLATION & OWNER'S MANUAL

Medora Corporation • 3225 Hwy 22 • Dickinson, ND 58601
Ph +1 866 437 8076 • +1 701 225 4495 • Fax +1 701 225 0002 • www.medoraco.com

© 2014 Medora Corp.
O&M_GS12_20140513

# IMPORTANT

## YOU MUST COMPLETELY READ AND FULLY UNDERSTAND THESE INSTRUCTIONS BEFORE INSTALLING, OPERATING, OR SERVICING THIS UNIT.

**Be sure you have read all installation, operation, maintenance, and safety instructions before you service or begin to operate this unit.**

Accidents occur every year because of careless use of industrial equipment. You can avoid hazards by following these safety instructions, and applying some ordinary common sense when operating or servicing this unit.

Keep in mind that **full operator attention and alertness** are required when operating or servicing this unit.

**Use common sense!** Most accidents can be avoided by using **common sense and concentrating** on the job being done.

Identify all possible hazards. Determine what safeguards are needed and implement them. **Only you, the user,** understand your product and system characteristics fully. ***The ultimate responsibility for safety is with you. Your safety ultimately rests in your hands.*** Do your part and you will enjoy safe, trouble free operation for years to come.

***IMPORTANT!!!***

***PLEASE FOLLOW ALL FEDERAL AND STATE LAWS IN REGARDS TO SAFETY REGULATIONS OF WORKING AT HEIGHTS, CONFINED SPACES, RESCUE, ETC. AS REQUIRED BY THE U.S. DEPARTMENT OF LABOR, OCCUPATIONAL SAFETY AND HEALTH ADMINISTRATION. PLEASE USE NECESSARY PPE WHEN INSTALLING AND SERVICING THIS UNIT.***

# SAFETY

**Laceration Hazard** CAUTION: WHEN UNPACKING, BE CAREFUL AS THE PACKAGING STAPLES MAY BE SHARP AND CAUSE LACERATION IF PROPER CARE IS NOT USED.

---

## Entanglement Hazard

WARNING: WHEN LOWERING OR RAISING THE GS-12 MIXER, BE SURE THAT YOU AND OTHERS ARE CLEAR OF THE ELECTRIC CORD AND CHAIN TO AVOID ENTANGLEMENT!

---

## ELECTRICAL HAZARD

WARNING: THIS EQUIPMENT CONTAINS HIGH VOLTAGE! ELECTRICAL SHOCK CAN CAUSE SERIOUS OR FATAL INJURY. ONLY QUALIFIED PERSONNEL SHOULD ATTEMPT INSTALLATION, OPERATION AND MAINTENANCE OF ELECTRICAL EQUIPMENT. REMOVE ALL SOURCES OF ELECTRICAL POWER BEFORE PERFORMING ANY SERVICE WORK TO THE SOLARBEE. USE PROPER LOCKOUT TAGOUT (LOTO) PROCEDURES TO ENSURE A SAFE WORK ENVIRONMENT.

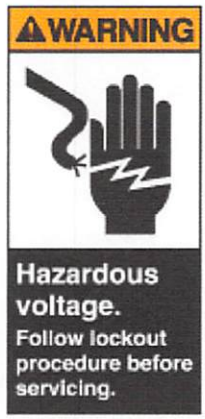

# PACKAGE CONTENTS

GS-12 Mixer

75 feet (22 meters) of submersible power cord and retrieval chain

Tank-roof junction box (mounts onto through-tank fitting)

Through-tank fitting for power cord; supports junction box and retrieval chain attach point

Kellem Grip Cord Strain Relief

1 5/16" Hole Saw

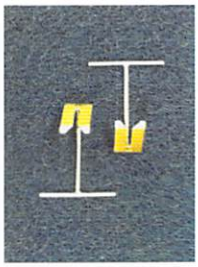

Chain Grab Tools

GS-12 SCADA Panel (Optional Accessory Item)

Lexel Sealant Tube



Attachment: Mixer Specifications (4040 : Discussion on the need for Water Tower Mixers)

# REQUIREMENTS

**TOOLS REQUIRED:**
Cordless Drill

Metal Hole Saw: 1-5/16" (1.313 inch / 33mm) Diameter

Chain Grab Tools

Catch bucket or box

High quality sealant (Lexel Brand)

Large Channel Lock & Large Pipe Wrench

**POWER REQUIREMENT:**
120 VAC, 20 amp service and means of quick power disconnect recommended

**HATCH REQUIREMENT:**
**A 12 inch (305 mm) diameter hatch opening is required to fit the GS-12 Mixer through.**

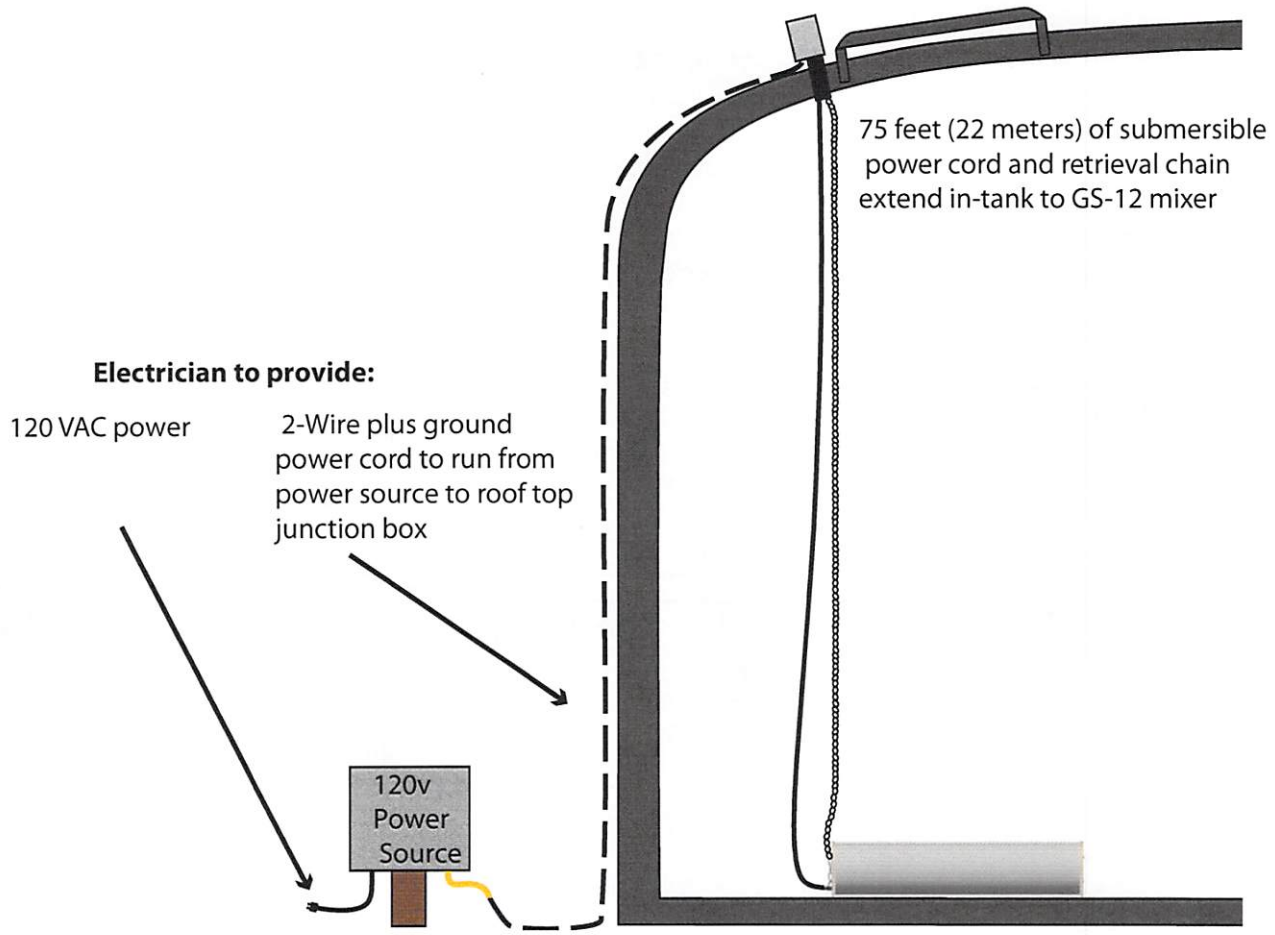




Attachment: Mixer Specifications (4040 : Discussion on the need for Water Tower Mixers)

# INSTALLATION

**INSTALL THROUGH TANK FITTING:**

STEP 1: Locate the hatch where the GS-12 Mixer will be installed through and mark a penetration point on the roof for the through tank fitting that the electric cable will pass through. When selecting a penetration location through the roof, be sure confirm the following:
A. The penetration is not going to hit an internal tank beam
B. The penetration is centered within a clear footprint of approximately 8-inch X 8-inch (20cmX20cm)
C. The penetration can be accessed on the inside of the tank with a catch bucket when reaching from the hatch.

STEP 2: Use a cordless drill with the 1-5/16 inch (33mm) hole saw and begin drilling a hole through the tank roof. A small amount of food grade vegetable oil works well for lubrication of the hole saw. Prior to completing the penetration, position a catch bucket below the penetration point to catch filings and the hole cut out. If a catch bucket is not readily available, use the cardboard box the hole saw and fittings came in to catch the filings and disc cut out from falling into the tank.

STEP 3: Thoroughly clean all surfaces around the penetration of any filings before removing the catch bucket. The penetration is now ready for a sealant application and installation of the Through Tank Fitting.

STEP 4: Apply a healthy amount of sealant on all the surrounding surfaces of the penetration (interior, exterior, and inner wall). This will prevent future corrosion of the roof around the fixture.

STEP 5: Install the Through Tank Fitting as shown below so that there is an interior and exterior nut and gasket in place prior to tightening the fixture to the roof. Adjust the height of the fixture so the top is approximately 3-1/2 inches (9cm) above tank roof. Tighten jam nut to firmly secure the fixture to the roof using a large channel lock and pipe wrench.

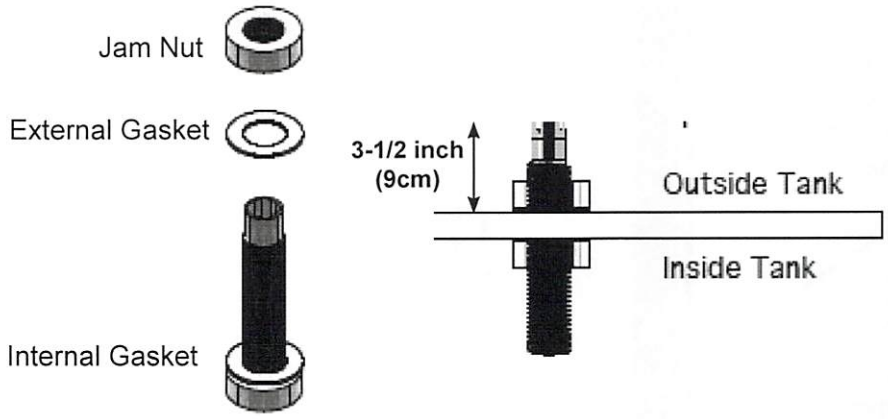


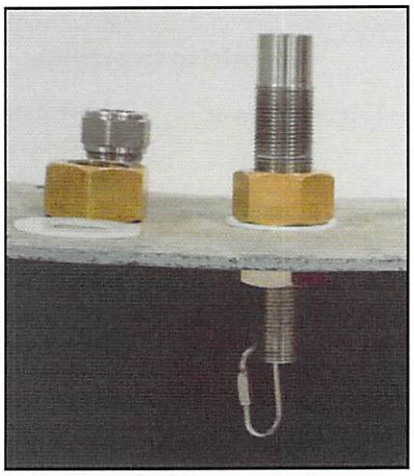



Attachment: Mixer Specifications (4040 : Discussion on the need for Water Tower Mixers)

# INSTALLATION

## INSTALL TANK ROOF JUNCTION BOX:

STEP 1: Locate the Junction Box and the cordless drill with 1-5/16 inch (33mm) hole saw. Drill a hole through the Junction Box as shown below. This process produces fiberglass powder and residue while the hole is being drilled. It is recommended to drill the enclosure at ground level and thoroughly clean out enclosure following this procedure. This will prevent fiberglass powder or residue from getting inside the water tank.

STEP 2: Secure the Junction Box over the Through Tank Fitting with a gasket, jam nut, and stainless steel cord grip as shown. Using channel lock and pipe wrench, tighten the jam nut so the enclosure is firmly clamped to the Through Tank Fitting.

STEP 3: Notice the quick link on the interior side of the Through Tank Fitting which can be used as a secure tie off point for the retrieval chain and electric cable kellum grip during GS-12 Mixer Installation.

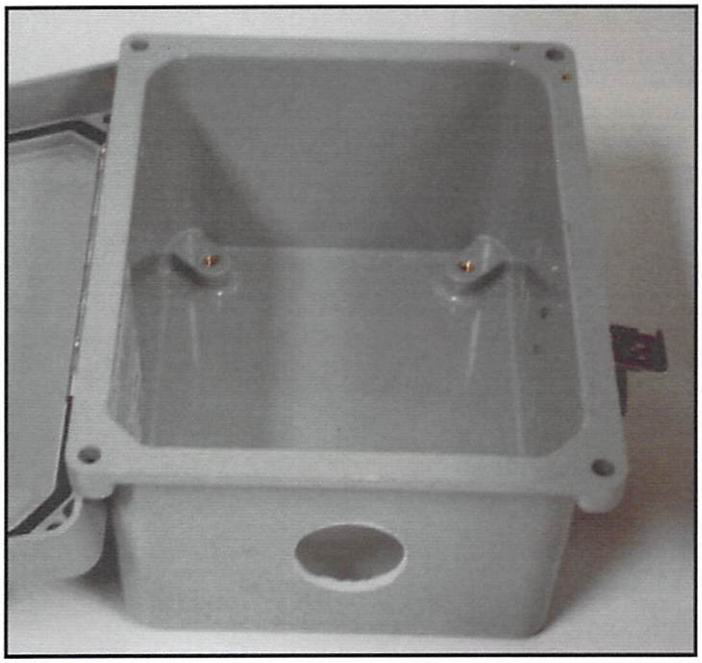

Quick Link



Attachment: Mixer Specifications (4040 : Discussion on the need for Water Tower Mixers)

# INSTALLATION

**INSTALL GS-12 MIXER:**

STEP 1: Plan out a safe procedure and hoist the GS-12 Mixer to the top of the tank near the hatch opening. Use the chain and submersible cable attached to the GS-12 Mixer for lifting and supporting the weight. Keep clear of chain and electric cord to avoid entanglement.

STEP 2: Tie off the tail end of the access chain and electric cord kellum grip to the quick link at the bottom the Through Tank Fitting.

STEP 3: Slowly and carefully lower the GS-12 Mixer down to the tank floor until it is resting on the bottom. The proper position is when the flat edge of the GS-12 Mixer ends are resting on the floor and GS-12 Mixer discharge slots are facing upward as shown below.

## Entanglement Hazard

**WARNING: WHEN LOWERING OR RAISING THE GS-12 MIXER, BE SURE THAT YOU AND OTHERS ARE CLEAR OF THE ELECTRIC CORD AND CHAIN TO AVOID ENTANGLEMENT!**

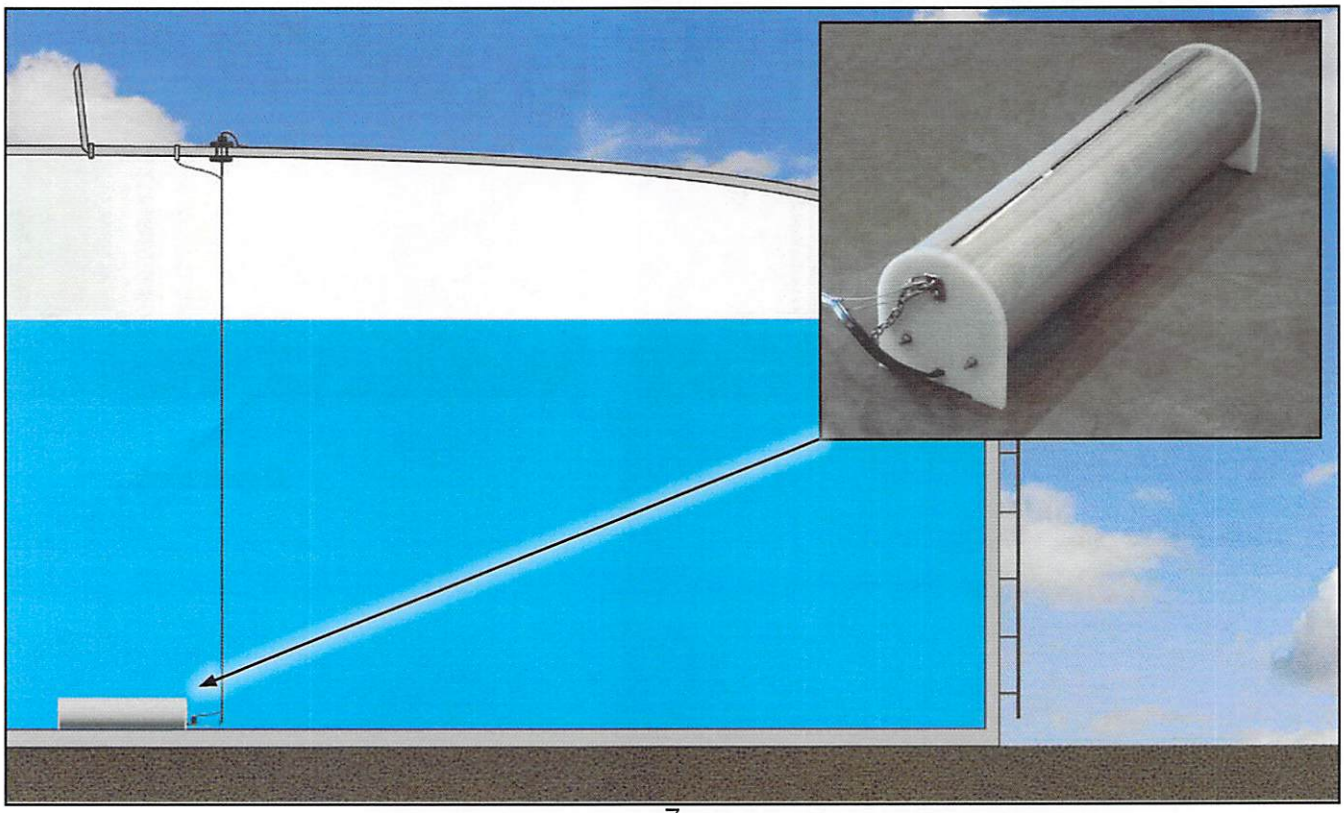

# INSTALLATION

**PULL ELECTRIC CORD:**

STEP 1: With the GS-12 Mixer resting on the floor, pull the electric cord up through the Through Tank Fitting and Stainless Steel Cord Grip into the Junction Box as shown.

STEP 2: With extra electric cable to spare inside Junction Box, tighten the Stainless Steel Cord Grip.

STEP 3: Adjust along the electric cable on the interior so that the weight of the electric cable places the kellum grip in tension with slack in the electric cable going into the Through Tank Fixture.

STEP 4: Once kellum grip is adjusted, connect it to the quick link and confirm that everything is in place as shown below.

Attachment: Mixer Specifications (4040 : Discussion on the need for Water Tower Mixers)

# INSTALLATION

**GS-12 120v INSTALLATION & WIRING:**

Only qualified personnel should perform the following electrical connections.

## ELECTRICAL HAZARD

**WARNING: THIS EQUIPMENT CONTAINS HIGH VOLTAGE! ELECTRICAL SHOCK CAN CAUSE SERIOUS OR FATAL INJURY. ONLY QUALIFIED PERSONNEL SHOULD ATTEMPT INSTALLATION, OPERATION AND MAINTENANCE OF ELECTRICAL EQUIPMENT. REMOVE ALL SOURCES OF ELECTRICAL POWER BEFORE PERFORMING ANY SERVICE WORK TO THE SOLARBEE. USE PROPER LOCKOUT TAGOUT (LOTO) PROCEDURES TO ENSURE A SAFE WORK ENVIRONMENT.**

STEP 1: Determine the location of the 120 volt source to supply power to the GS-12 Mixer. It is recommended that the 120 volt power source include GFCI, fuse protection and a quick means of disconnecting power to the GS-12 Mixer.

STEP 2: Once the 120 volt source is established, run adequately sized power conductor between the Control Box and Junction Box at the top of the tank. The submersible motor is 2-wire plus ground, so 2 power conductors and a ground conductor will be needed. The conductor should be sized for less than 10.0 volt drop while operating at 120 volts AC, 11.0 Amps. Power Conductor spanning from power source to junction box at tank roof not included.

STEP 3: Using color code below, perform a splice connection of the power and ground conductors to the termination of the submersible cable within the Junction Box.

COLOR CODE:
WHITE : 120VAC Neutral BLACK : 120VAC Hot GREEN : Ground RED (Not Used)

STEP 4: Following connection of the power and ground conductors up at the junction box, close the Junction Box latching it shut. The Junction Box contains a pad-lockable latch.

# STARTUP

**STARTUP SYSTEM:**

STEP 1: With GS-12 Mixer submerged, engergize by applying 120 VAC Power.

**IMPORTANT: When tank is drained, be sure to turn the GS-12 Mixer off to prevent damage and compromised life. Unit is designed for submersed operation only. The GS-12 can be supplied with an optional SCADA package that allows for PLC automated On/Off control triggered by water level.**

STEP 2: When qualified personnel are present, use an AC Clamp-Style Ammeter to measure current passing through 120 VAC circuit. During normal operation, the GS-12 will draw between 8.5 and 11.5 Amps.

# OPERATION

The GS-12 is designed to circulate water by bringing water from along the tank floor and sending it upward and out across the water surface in layers causing direct and induced mixing effects. The near laminar layers flow outward radially, in diverging stream lines directly above the GS-12. As flow leaves the GS-12, vertical flow is induced in between the water being drawn below and the water above. At the level of the flow intake, water is drawn from all inner walls and along the floor of the tank. As this lower layer of fluid makes its way inward with converging streamlines to the GS-12, the water is forced upward, toward the surface, providing gentle mixing, de-stratification, and surface renewal.

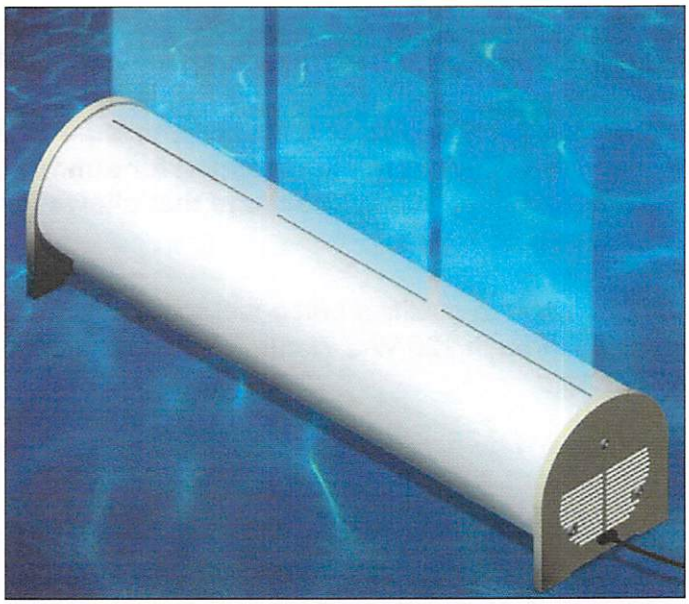

Flow Coming Out Of GS-12

During operation, a visible flow can be observed at the surface above the GS-12. The GS-12 is designed to operate at a full speed and full flow continuously.

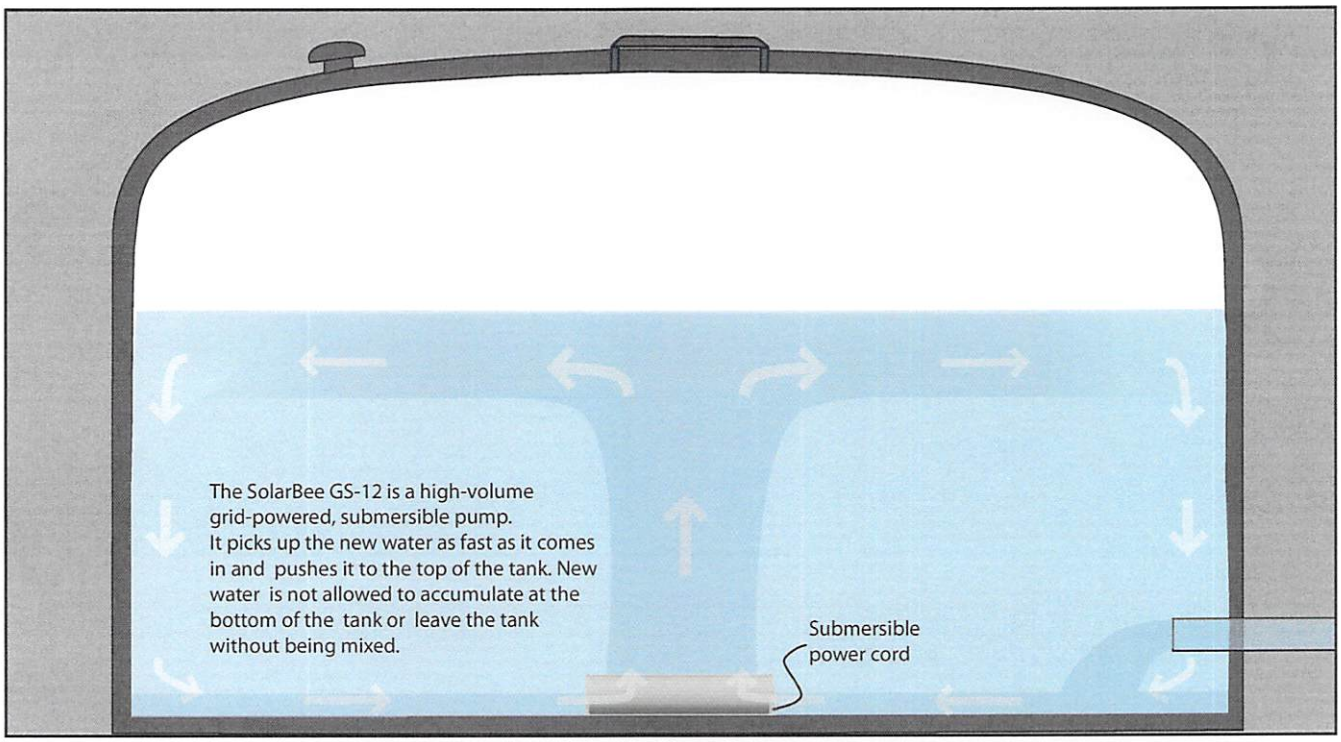


GS-12 Flow Pattern



Attachment: Mixer Specifications (4040 : Discussion on the need for Water Tower Mixers)

FEATURE SHEET

GridBee®

## GS-12 FEATURES

| | |
|---|---|
| **Technology Description** | Submersible, grid powered, circulation equipment for potable water tanks and reservoirs. Designed for continuous operation and can be installed through roof hatch without requiring tank entry. |
| **Minimum Access Opening / Machine Size/Weight** | Machine can be installed through 12 inch (30 cm) diameter opening. Assembled machine is 3 feet (0.9 meter) in length X 10 inch (25.4 cm ) in diameter and weighs 75 pounds (34 kg). |
| **Materials of Construction** | 316 stainless steel shell and hardware construction. GS-12 has been constructed using safe materials for contact with potable water. See certifications section below. |
| **Submersible Motor** | Submersible motor, designed for continuous operation, low power requirement, direct drive, no gearbox and no lubrication schedule required. See certifications section below. |
| **Power Supply** | The standard 120VAC motor requires 120VAC/1PH power source outlet (Minimum 20 Amp Service), nominal power consumption is 800 Watts. The GS-12 unit draws approximately 11.0 Amps @ 120VAC / 60Hz. |
| **Wiring** | 75 ft (22 m) of submersible power conductor included to terminate within junction box at top of tank. Junction box, also included. |
| **Sealed Tank Fitting** | 316 stainless steel tank fitting and cord grip included for sealed cord entry through tank roof. |
| **Retrieval Chain** | 75 ft (22 m) of 316 stainless steel retrieval chain included for machine installation and retrieval without requiring tank entry. |
| **Chlorine Boost Connection** | Chlorine boost connection point on machine for adapting to 1/2" (13mm) hose for fast chlorine dispersion during in-reservoir boosting. |
| **Low Elevation Intake** | Intake draws water in a horizontal layer within 8 inches (15 cm) of the tank or reservoir floor. |
| **Minimum Water Depth** | At depths below 2 feet (0.6 meters), the machine should be shut off to prevent damage. |
| **Accessories Available** | (1) Portable Chlorine Boost Hose and Boost Pump System, (2) Control and SCADA Panel |
| **Warranty** | Limited 5-year parts and labor warranty. |
| **Certifications** | Medora Corporation's potable water products are certified to ANSI/NSF Standard 61, including Annex G for low-lead content. Learn more at: www.medoraco.com/std61 |

Subject to change without notice.

Medora Corporation • 3225 Hwy 22 • Dickinson, ND 58601
+1 866 437 8076 • Ph +1 701 225 4495 • Fax +1 701 225 0002 • www.medoraco.com
© 2014 Medora Corp.

FeatureSpec_GS12_20140513

# GS-12 MIXER DWG

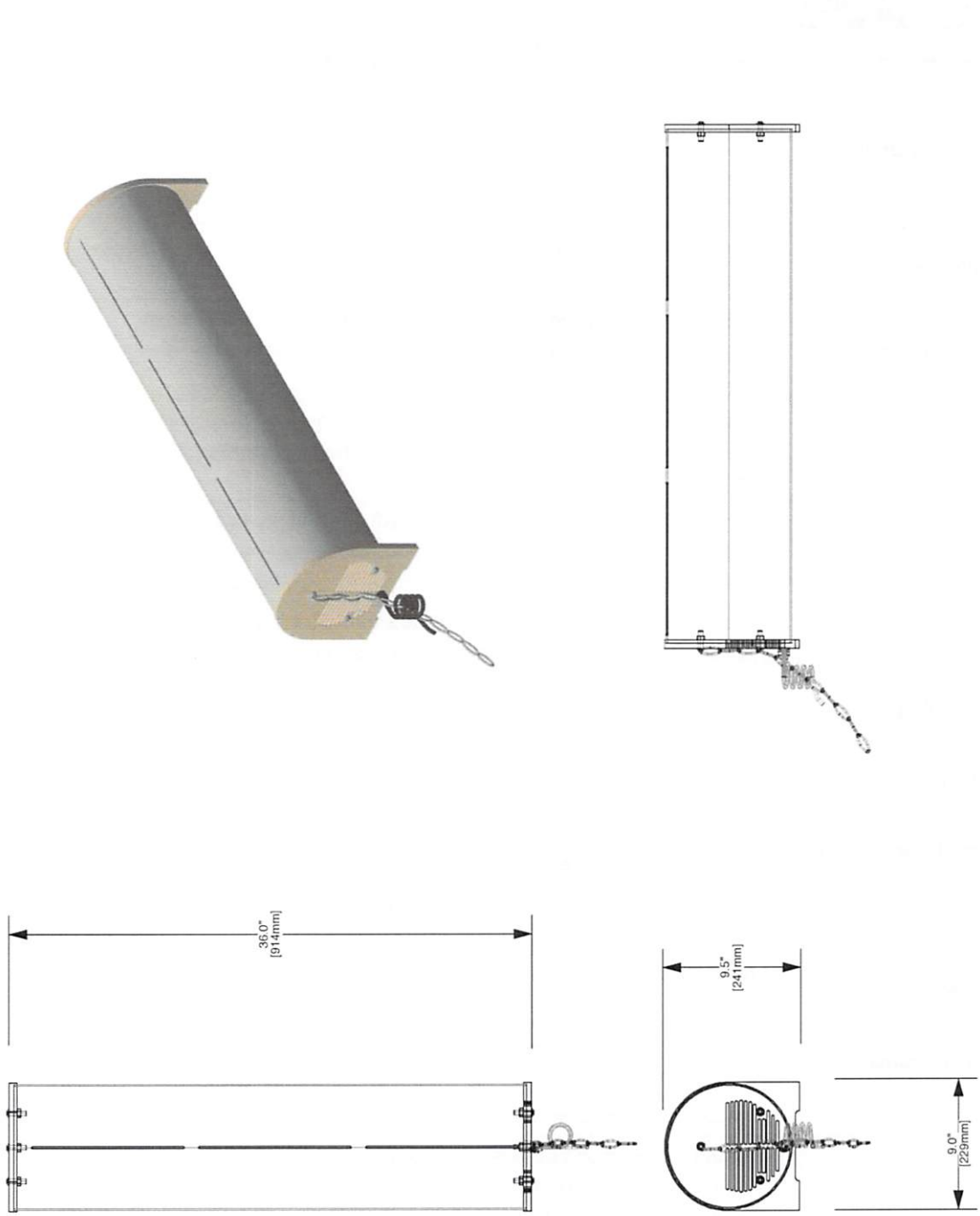


| | | |
|---|---|---|
| Weight: 70lb (32 kg) | THE INFORMATION CONTAINED IN THIS DRAWING IS THE SOLE PROPERTY OF SOLARBEE, INC. ANY REPRODUCTION IN PART OR AS A WHOLE WITHOUT THE WRITTEN PERMISSION OF SOLARBEE, INC. IS PROHIBITED | GridBee |
| | TITLE: MODEL GS12 | |
| SCALE: 1:10 | DRAWN BY: SolarBee | PART NO: OVERALL DIMENSIONS | REV |
| DATE: 1/17/2013 | FILE NAME: GS12_Dwg_20130117 | |



Attachment: Mixer Specifications (4040 : Discussion on the need for Water Tower Mixers)

**Main Office and Service Center**
Medora Corporation
3225 Hwy 22, Dickinson, ND 58601
+1 866 437 8076 • +1 701 225 4495 • Fax: +1 701 225 0002

## GridBee GS-12 (120V) SCADA Panel

The GridBee GS-12 SCADA Accessory Package offers the ability to monitor a GS-12 for proper operation through a 4-20mA output and remotely control on or off by a local PLC. The unit is contained within a NEMA 4X enclosure to be mounted near the 120 VAC Power Source. Additonal features include a Ground Fault Circuit Interrupter (GFCI) Hand Off Auto (HOA) 3-position switch and operation indication light. Certified UL508.

**Monitoring:** The 4-20mA signal offers a scaled value of the mixer operating current which during proper operation falls within a specified range. 24 VDC power required, not included.

**On/Off Control:** A relay is available with a 24 VDC coil to offer remote on or off control while the HOA switch is positioned in Auto for conditions requiring the unit to be shut off such as low water level.

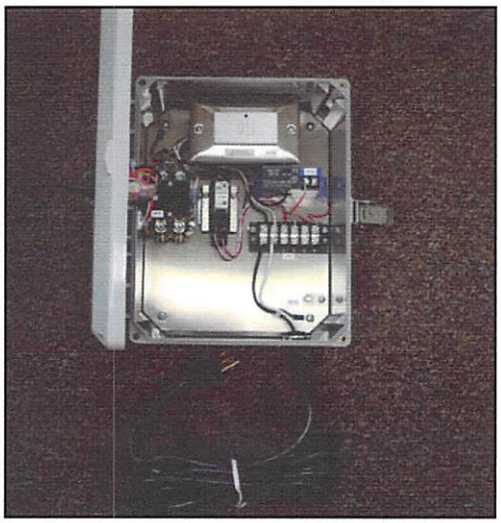

**Specifications:**

**Power Source Required:** 120vAC, 30 Amp Outdoor Rated Receptacle

**Enclosure:** 10 inch X 8 inch X 4 inch, NEMA 4X Molded Carlon
Mounting Feet Hole Pattern: 6.25 inch wide X 11.375 inch high
Back Insert Hole Pattern: 6.25 inch wide X 8.25 inch high

**4-20mA Module:**
Power Source Required: 5-40 VDC
Linear Scaling: Mixer Current = 1.25 * (mA Value) - 5
4 mA = 0 Amps Mixer Current 20 mA = 20 Amps Mixer Current
Normal Operating Range = 10.0 mA - 13.0 mA (8.5 A - 11.5 A)

**On/Off Relay:**
Coil Power: 24 VDC Nominal
Type: Normally Open, Can be field adjusted to Normally Closed if required.

**See Page 2 For Integration Diagram and Page 3 For Panel Wiring Diagram:**

 © 2013 Medora Corp • Dickinson, ND

## Integration Diagram:

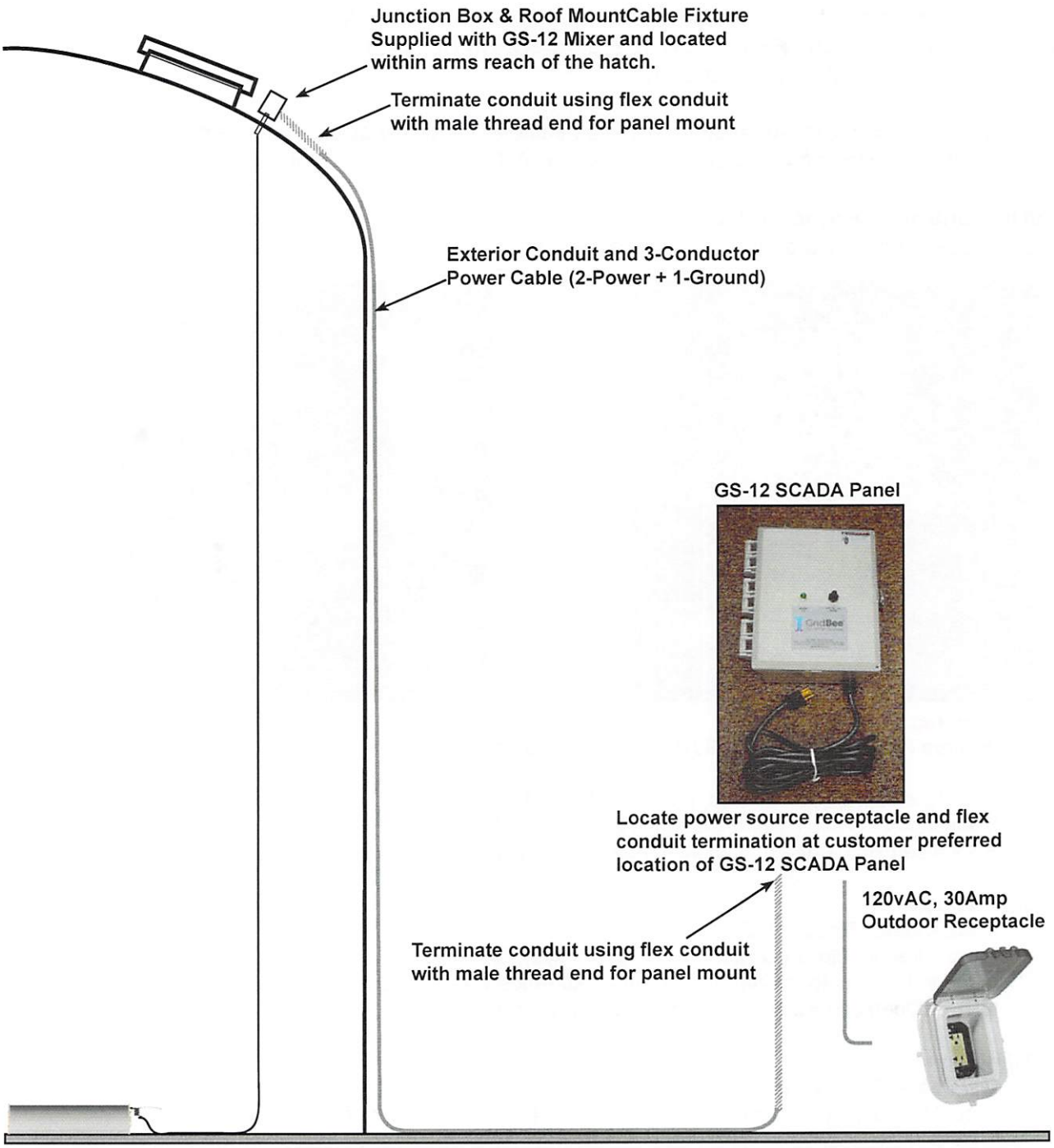


 © 2013 Medora Corp • Dickinson, ND

## Wiring Diagram:

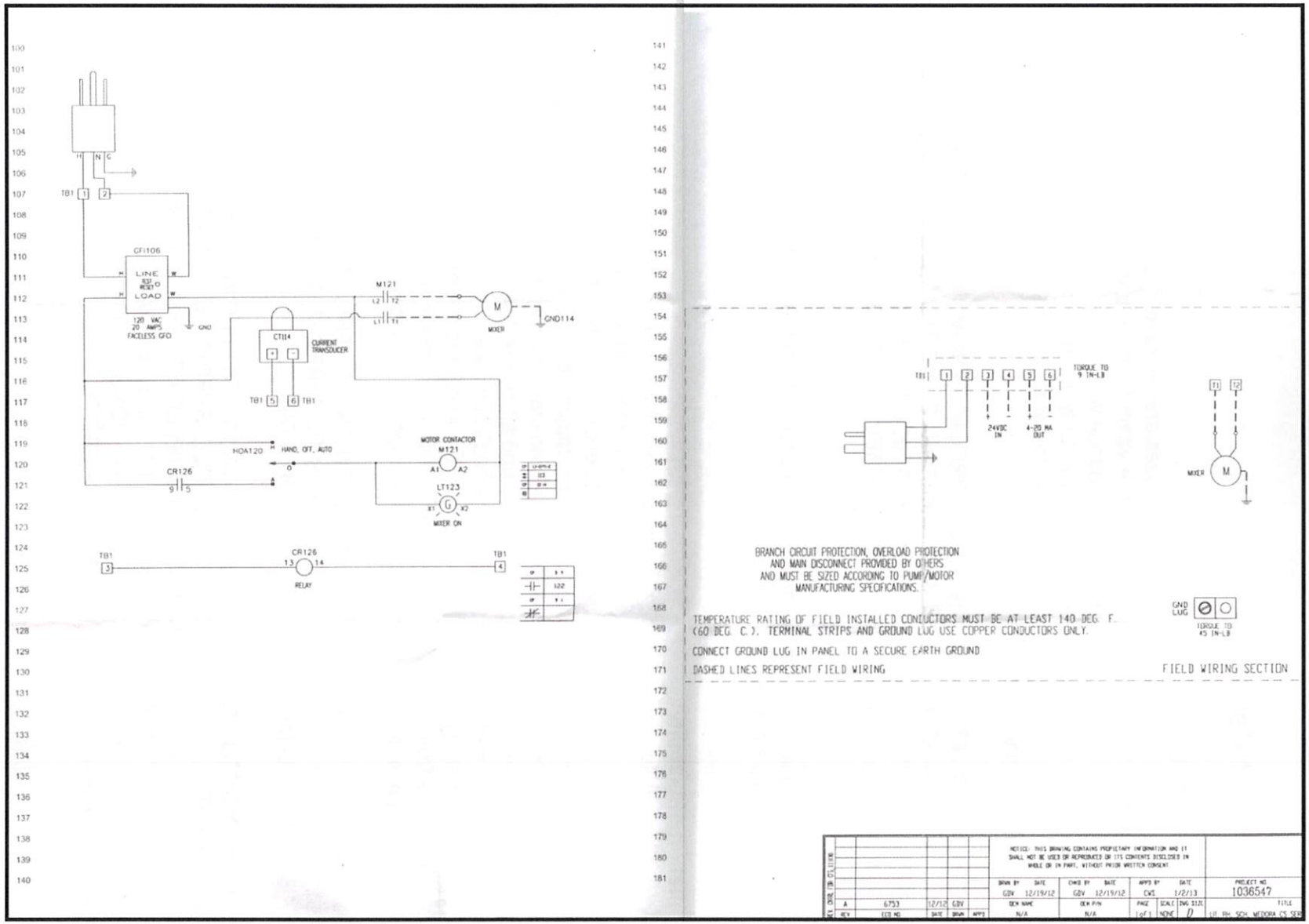


GS-12_120V_SCADA_20130726 Page 3 of 3 © 2013 Medora Corp • Dickinson, ND

# WARRANTY

## Warranty Statement:

**Limited Replacement Warranty:**
The GridBee Series GS mixers and control boxes are warranted to be free of defective parts, materials, and workmanship for a period of five years from the date of purchase. This warranty is valid only for use of the equipment in accordance with the owner's manual and any initial and ongoing factory recommendations. This warranty is limited to the repair or replacement of defective components only and does not apply to normal wear and tear. Also, there is no liability for consequential damages of any type.

EXCEPT AS STATED ABOVE, MEDORA CORPORATION AND ITS AFFILIATES EXPRESSLY DISCLAIM ANY AND ALL EXPRESS OR IMPLIED CONDITIONS, REPRESENTATIONS AND WARRANTIES ON PRODUCTS FURNISHED HEREUNDER, INCLUDING WITHOUT LIMITATION ALL IMPLIED WARRANTIES OF MERCHANTABILITY OR FITNESS FOR A PARTICULAR PURPOSE.

Please consult your state law regarding this warranty as certain states may have legal provisions affecting the scope of this warranty.

**Limitation of Liability:**
Many of the employees at Medora Corporation have extensive scientific and practical knowledge relating to solving water quality problems. From time to time, they may offer solicited or unsolicited advice, ideas, judgment or opinions on how to deal with certain situations, none of which offers a guarantee of future events. Due to the many factors, complexity and uncertainty involved in solving water problems, you agree to release and indemnify Medora Corporation and its affiliates, employees and agents from and against any and all claims, liabilities, costs and expenses which such indemnified party may incur or become subject to related to or arising out of any services or products furnished by Medora Corporation to you, except to the extent that any claim, liability or expense results from the gross negligence or intentional misconduct of an indemnified party as determined in a final judgment by a court of competent jurisdiction.

IN NO EVENT WILL MEDORA CORPORATION OR ITS AFFILIATES BE LIABLE FOR ANY DAMAGES CAUSED BY FAILURE OF BUYER TO PERFORM BUYER'S RESPONSIBILITIES OR FOR FOLLOWING MEDORA CORPORATION ADVICE.

IN NO EVENT WILL MEDORA CORPORATION OR ITS AFFILIATES BE LIABLE FOR ANY LOST PROFITS OR USE OR OTHER PUNITIVE, SPECIAL, EXEMPLARY, CONSEQUENTIAL, INCIDENTAL OR INDIRECT DAMAGES, HOWEVER CAUSED, ON ANY THEORY OF LIABILITY, WHETHER OR NOT MEDORA CORPORATION HAS BEEN ADVISED OF SUCH DAMAGES, OR REASONABLY COULD HAVE FORESEEN THE POSSIBILITY OF SUCH DAMAGES, OR FOR ANY CLAIM AGAINST BUYER BY ANOTHER PARTY.

KLM ENGINEERING, INC.
1976 Wooddale Drive, Suite 4 | Woodbury, MN 55125
Phone (651) 773-5111 | Fax (651) 773-5222

August 21, 2018

**By Email Only**

Mr. Gabe Steinagel
Utility Manager
City of Merrill
2401 River Street
Merrill, Wisconsin 54452

**RE: Proposal to Provide a New GridBee GS-9 Mixer and SCADA Control Box for the 200,000 Gallon Legged Elevated Water Tower Located in the City of Merrill, Wisconsin.**

Dear Mr. Steinagel:

Thank you for the opportunity to provide a GridBee GS-9 mixer and SCADA control box for the above-mentioned water tower in Merrill, Wisconsin.

**Scope of Work**

KLM will provide and install (1) GridBee GS-9-120v Electric Mixer and (1) SCADA control box (installed by electrician).

With over 1,500 installations nationwide, a Medora GS Series mixer is a perfect fit for your tank. The GS Series mixer's proven durability and performance surpasses that of other mixing systems, as seen by its CFD modeling and customer recommendations. In addition, each mixer comes with a 5-year manufacturer's warranty and NSF certification.

KLM Engineering, Inc. will submit the documentation on behalf of the City as required by the WI Department of Natural Resources for the mixer installation. The City will receive a copy of the approval of the mixer installation from the DNR. At the close of the project, KLM will submit the warranty documentation to Medora Corporation. A copy of the warranty documentation will be sent to the City for their records.

**Mixer:**
KLM will plan to do the installation in one trip, which would be one work day on site. The tank will not need to be drained for the installation. KLM will have the units shipped directly to the City of Merrill for no additional fees. Installation kits are included for the mixer. This will allow for your electrician to install the SCADA control box in a location close to the electrical source and to run the conduit and required wiring to an agreed upon location for (1) junction box. All standard-length suspension kits include 75 feet of electrical wire and chain. Suspension kit 150 feet in length can be purchased for an additional $400.00 prior to shipment of the units. Per Wisconsin DNR requirements, KLM will conduct (2) two safe bacteria samplings prior to putting the tower back into service.

The City of Merrill needs to exchange a minimum of 15% of the water in the elevated water tower for the mixer to be effective.

**A licensed electrician will be required to complete the electrical installation. The electrical installation fees are not included in this proposal. The SCADA integrator will be responsible for making the final hook up to the power panel and SCADA box system.**

**Owner's Responsibilities**

The Owner's personnel shall be responsible for:

- To provide power to the (1) control box and (1) junction box
- Making the final electrical connections at the junction box and control box
- Startup of the mixer while crew is on site to check operations
- Provide KLM with a tax exemption certificate if applicable

**Fees**

The total fee for providing the GS-9 mixer with KLM installation and a SCADA control box is $11,700.00.

**Agreement**

This agreement is valid for approval for work to be completed by the end of 2019. If the City of Merrill finds this proposal acceptable, please sign and return. When KLM receives the signed proposal, we will call the Owner to coordinate the mixer installation. This fee is based on KLM making one mobilization for the installation and inspection. This agreement, between the City of Merrill, Wisconsin and KLM Engineering, Inc. of Woodbury, Minnesota is accepted by:

_____ City of Merrill,
(Name) (Title) Wisconsin

_____
(Date)

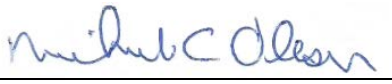
_____ WI Sales Manager _____ KLM Engineering, Inc.
(Name) (Title) Woodbury, Minnesota

August 21, 2018
(Date)

We look forward to working with you.

Sincerely,

**KLM ENGINEERING, INC.**
Michael C. Olesen
Office: 651-773-5111
Fax: 651-773-5222
Cell: 920-988-3431
Email: molesen@klmengineering.com

Enclosures: Medora GS Series Case Studies, GS-9 Mixer Brochure, GS Series Mixer CFD Modeling, KLM's Terms and Conditions

U:\Proposals\2018 Proposals\Merrill, WI .2MG Legged Mixer.doc

SolarBee® GridBee®

Medora Corporation

# Summarized Case Study (PW)
# Bandel Reservoir
# Rochester, MN

**Key Words**: Rochester, MN, potable, ice buildup, GS-12, stratification/water age, short circuiting, chlorine

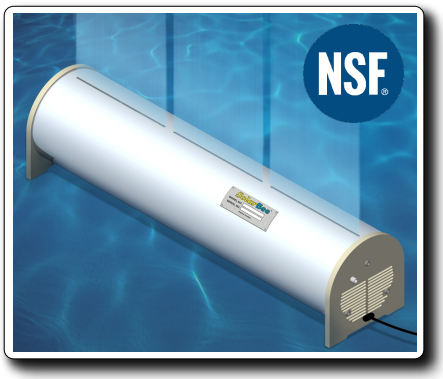


**Photos**: The photo on the left shows the Bandel Reservoir; photo on the right is an image of the GridBee GS-12 submersible mixer.

**Owner**: Rochester Public Utilities, Rochester, MN; Contact: Cary Johnson; Tel: 507-280-1507, work mobile: 507-273-1200; E-mail: cjohnson@rpu.org.

**Systems Overview:** The Bandel Reservoir, an above ground potable water storage reservoir, stands 46 feet tall, has a diameter of 96 feet and a total capacity of 2.25 MG. This is one of many reservoirs that provide potable water for the Rochester area. Source water for the city comes from thirty deep groundwater wells located throughout the city. The city uses chlorine as the disinfectant for treating potable water.

**Reported Problems Before SolarBee Installation:** The primary reason the community decided to install enhanced circulation was in response to ice buildup problems in their above ground tanks that can be 2+ feet thick during the winter months. Overall, main objectives for the GridBee GS-12 installation were to provide complete mixing throughout the tank in order to reduce ice buildup, minimize thermal stratification, and prevent short-circuiting and stagnant water conditions.

**SolarBee Installation:** Date: October 2011, installed one GridBee GS-12 submersible mixer in this potable water storage reservoir.

**Results:** The city reports that with the GridBee GS-12 installed, they did not have any ice buildup issues in the above ground potable water storage tank during the winter. This is in contrast to the other storage tanks/reservoirs in their system – without additional circulation, these tanks experienced noticeable ice buildup. The city also plans to conduct studies documenting changes in thermal stratification, short-circuiting and prevention of stagnation, and will share those results when available. Nevertheless, the city is very pleased with the benefits achieved with the GS-12 submersible mixer, and plans to install additional GridBee units into their other potable water storage reservoirs when economic conditions become more favorable.

194-USMNPW-LOC896.001, *Last updated: 8-23-12*

© 2013 • Medora Corporation • 1-866-437-8076 • *www.medoraco.com*

SolarBee GridBee
Medora Corporation

# Summarized Case Study (PW)
# Point Reservoir & South Tower
# East Grand Forks, MN

**Key Words**: East Grand Forks, MN, potable, stratification, water age, chloramine, short-circuiting, ice buildup, GS-12

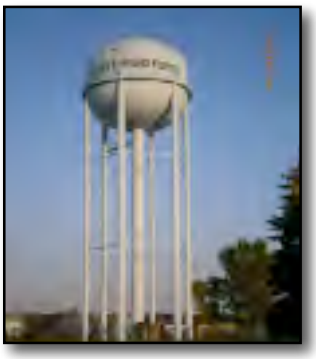

**Photos:** The left photo shows an aerial view of Point Reservoir under three tennis courts; the middle photo shows the Point Reservoir access hatch. The right photo shows the elevated South Tower.

**Owner**: East Grand Forks, City of, MN, Water and Light Department; Contact: Randy Rapacz, Water Plant Superintendent; Tel: 218-773-1511, Mobile: 701-741-9225, E-mail: rrapacz@eastgrandforks.net

**System Overview**: Point Reservoir is a 2 MG underground storage reservoir (122' x 182' x 13.5' high) that typically holds about 1.5 MG at about 8' deep. Together with a 1 MG plant reservoir they serve the potable needs of about 8,000 residents in East Grand Forks. The combined reservoir systems service two 0.5 MG elevated storage tanks, North Tower and South Tower. Source water is surface water from the Red Lake River, and chloramine is the disinfectant used. Average wintertime temperature of the water that is drawn into the plant and sent to the South Tower is 34°F.

**Reported Problem Before GridBee GS-12 Installation:** In warm weather, Point Reservoir and the South Tower experienced thermal stratification (temperatures varied 3-5° F from top to bottom), loss of residual chlorine, and some nitrification problems. In the winter, icing was a significant problem in the elevated North and South Towers. Mr. Rapacz attended a webinar on mixing and became interested in the mixing philosophy. The city consulted with KLM Engineering in Minneapolis, who offered Medora Corporation as a recommendation for solving their potable water problems.

**GridBee GS-12 Installations:** In August 2011, the East Grand Forks Water Department installed one GridBee GS-12 submersible mixer in Point Reservoir. The GS-12 is located about 50' from the hatch test point, in the short-circuit path between inlet and outlet (see illustration on page 2). Following a successful year of mixing in Point Reservoir and the summer 2012 repair, cleaning, and repainting of the South Tower, a second GS-12 mixer was installed in the South Tower in August 2012. The GS-12 is suspended below the hatch just above coned lower portion of the tank floor.

**Results:** During the month following the GS-12 installation in Point Reservoir, water temperatures converged throughout the tank showing less than 0.2°F separation from top to bottom. Daily temperature and chlorine residual measurements documented changes associated with alternating periods when the GS-12 was turned off and then turned back on. Results confirmed that the GS-12 did indeed meet expectations. When the GS-12 was on, temperatures throughout the reservoir converged to within approximately 0.2° F and chlorine residuals remained consistent at 2.5 mg/L, indicating complete mixing (see graph on page 2). When the GS-12 was off, temperature variances of more than 3°F quickly occurred and chlorine residuals

Attachment: Legged Mixer Proposal (4040 : Discussion on the need for Water Tower Mixers)

frequently declined to about 1.5 mg/L. East Grand Forks is extremely pleased with the GS-12 mixing performance and has raised the water depth to nearly 10 feet, increasing volume to 1.75 MG.

In the elevated South Tower, a tank inspection was performed in early March 2013. Though winter 2012 – 2013 has been much colder than the previous year, the southeast side of the tank had minimal surface ice formation while the remainder of the tank was ice-free. This tank had substantial ice buildup in winter 2011-2012. East Grand Forks views this as a clear indication that the addition of the GS-12 mixer has provided sufficient mixing to effectively reduce ice formation during the cold winter months.

192-USMNPW-LOC860.001, *Last updated: 3-26-13*

**Additional Photos:**

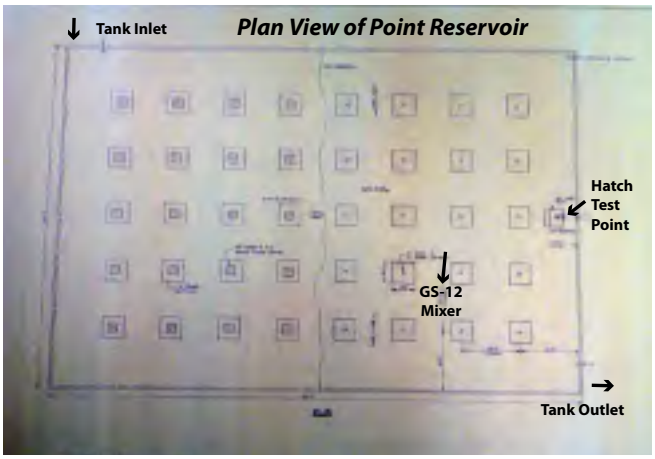


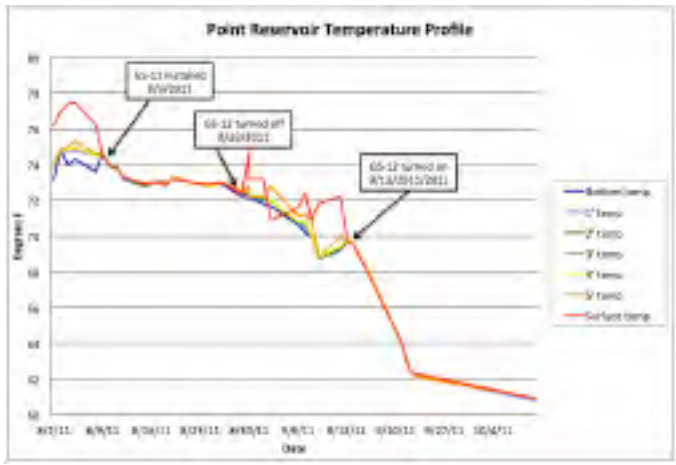


The illustration above left is a plan view of Point Reservoir, showing the locations of the inlet, outlet, the hatch where testing was conducted, and the GridBee GS-12 mixer. The graph above right shows the temperature profiles during the testing period Aug – Sep 2011, documenting the rapid temperature convergence when the GS-12 was turned on and the rapid return of thermal stratification when the GS-12 was turned off.

Despite the difficult photographic environment, the left photo shows significant ice buildup in the elevated South Tower in winter 2011-2012. The right photo shows virtually no ice one year later, following the installation of the GS-12 mixer in August 2012, despite the colder winter temperatures.

© 2013 • Medora Corporation • 1-866-437-8076 • *www.medoraco.com*

# GridBee GS-9 Submersible Mixer

GridBee GS-9 submersible mixer thoroughly mixes potable water storage tanks of a wide size range - especially the bottom three feet, the most critical part of the tank. Economical to purchase and operate, the electric GS-9 is easily installed by lowering through any 12" or larger tank hatch. There is no need t enter or drain the tank.

## Features & benefits of the GS-9 submersible mixer:

- Eliminate ice damage to tanks in cold climates
- Provide uniform water age and disinfectant distribution
- Prevent stagnation, thermal stratification, and short-circuiting
- Reduce nitrification in chloraminated systems
- Use less disinfectant and produce fewer disinfection byproducts
- Thoroughly mixes entire tank, including floor and walls where bacteria builds up
- Low power consumption
- Low-impact feet and endcaps will not damage interior tank coatings
- Optional NEMA 4X control box with SCADA monitoring
- Compatible with disinfectant boost and THM removal systems
- Suspension kit included to keep mixer off tank floor if desired

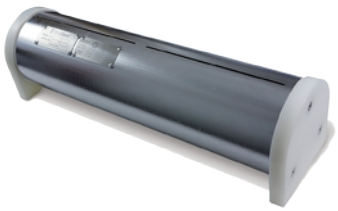

## Specifications:

- Dimensions: 24 inches (62 cm) long, 11.5 inches (30 cm) diameter
- Weight: 60 pounds (28 kg); shipping weight 100 pounds (46 kg)
- 120v standard; 240v option available
- Five year parts and labor warranty

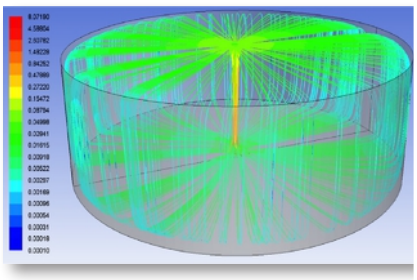

*CFD Modeling Available for Your Tank!*

*Medora Corporation's potable water products are certified to **NSF/ANSI Standard 61**, and **NSF/ANSI 372** for lead-free content. Learn more at **www.medoraco.com/std61**.*

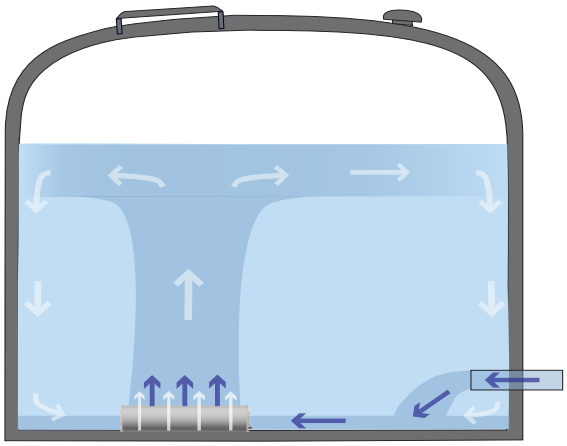

*GridBee GS Mixers thoroughly mix the entire tank volume from the floor to the water surface. The result is consistent disinfectant residual, uniform temperature, and uniform water age throughout the tank.*

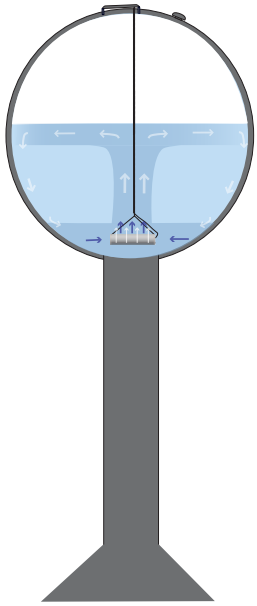

## Installation Overview

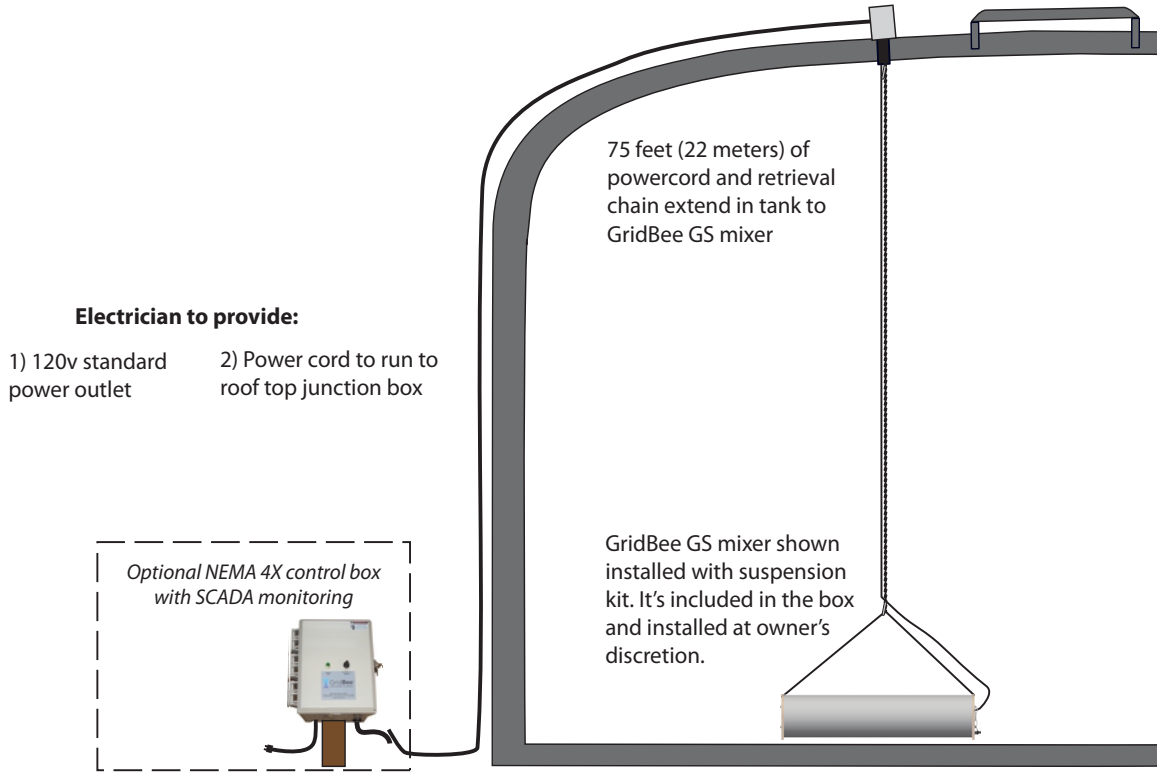


## Package Contents

*SolarBee® and GridBee® are brands of Medora Corporation*

**Medora Corporation**
3225 Hwy 22 • Dickinson, ND 58601
Ph +1 866 437 8076 • www.medoraco.com
GS9_20150514 • © 2015 Medora Corporation

*Locally Represented By:*

KLM Engineering Inc. WATER TOWER SPECIALISTS
1976 Wooddale Drive, Suite 4
Woodbury, MN 55125
Office 651-773-5111
Fax 651-773-5222

Attachment: Legged Mixer Proposal (4040 : Discussion on the need for Water Tower Mixers)

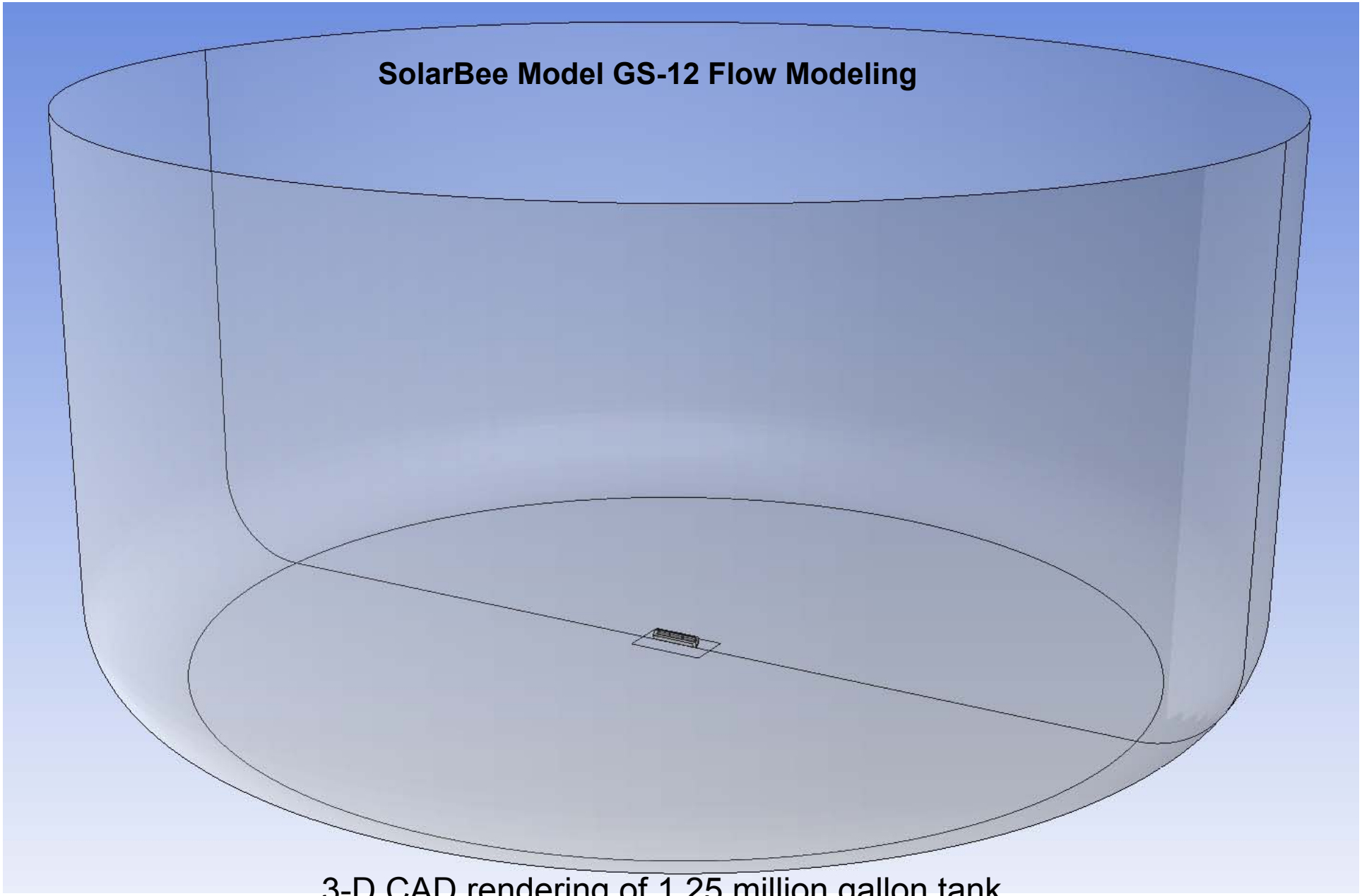


3-D CAD rendering of 1.25 million gallon tank

Diameter: 74.5 ft. Filled to depth: 36ft

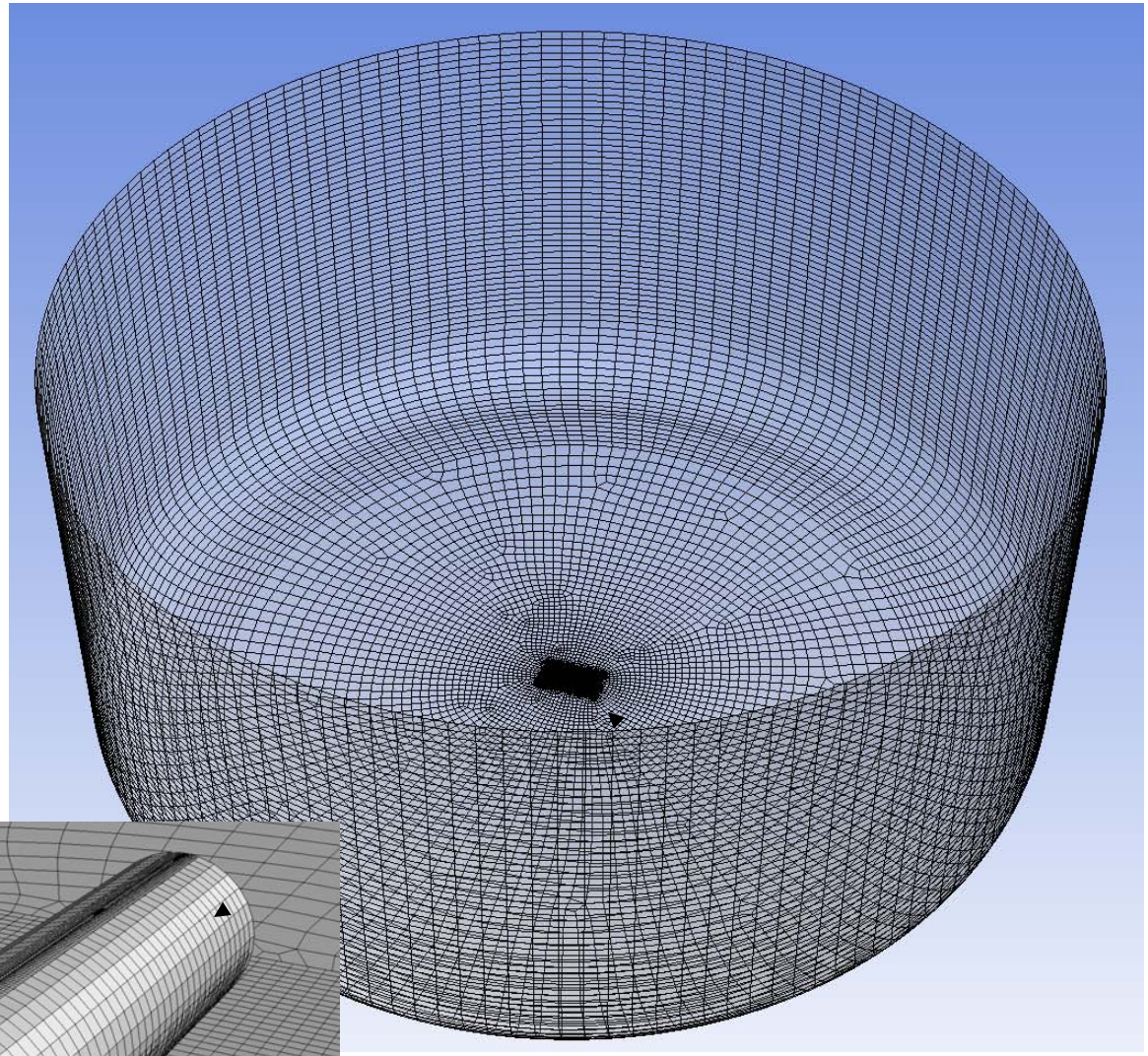

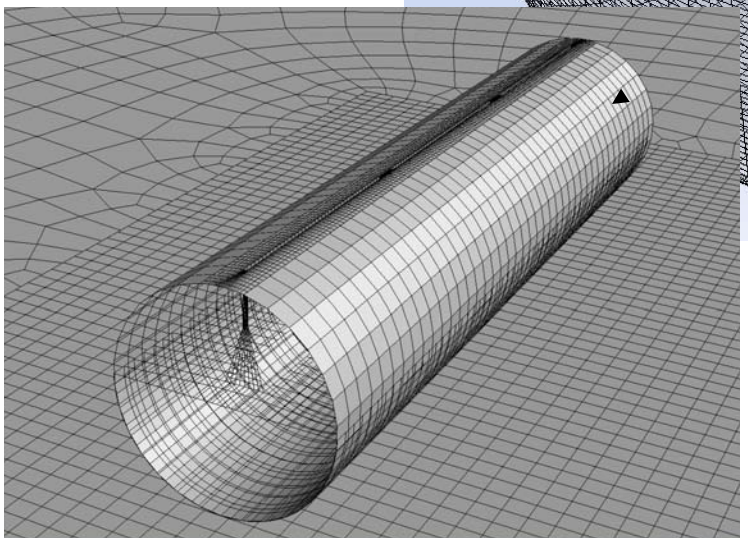

High cell density at the location of the GS-12

The mesh for the 1.25 million gallon tank comprises 577,424 cells. Size ranges from .013 inches at the the jet slots to roughly 1 ft. at the tank periphery.

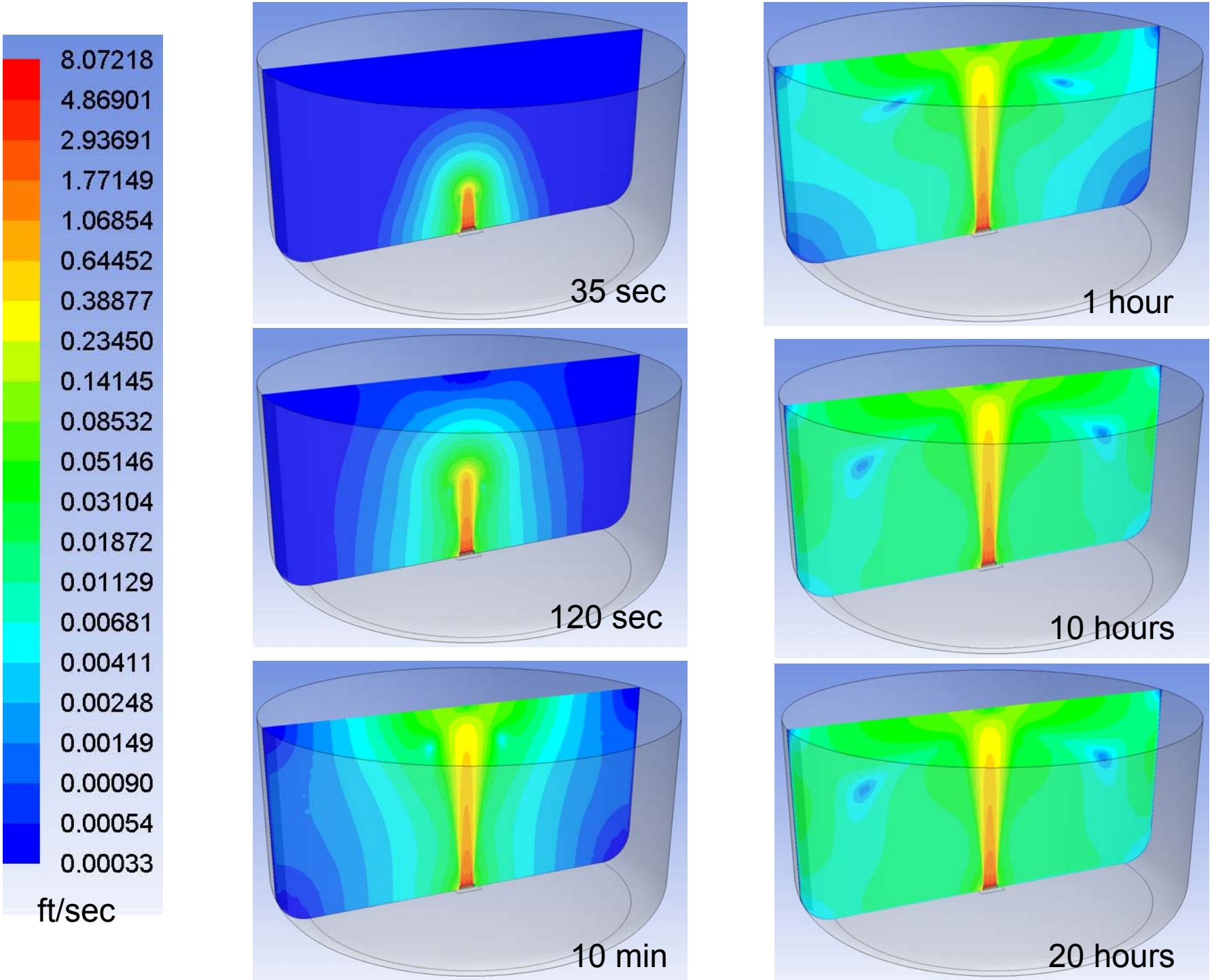
8.07218
4.86901
2.93691
1.77149
1.06854
0.64452
0.38877
0.23450
0.14145
0.08532
0.05146
0.03104
0.01872
0.01129
0.00681
0.00411
0.00248
0.00149
0.00090
0.00054
0.00033
ft/sec
35 sec
1 hour
120 sec
10 hours
10 min
20 hours

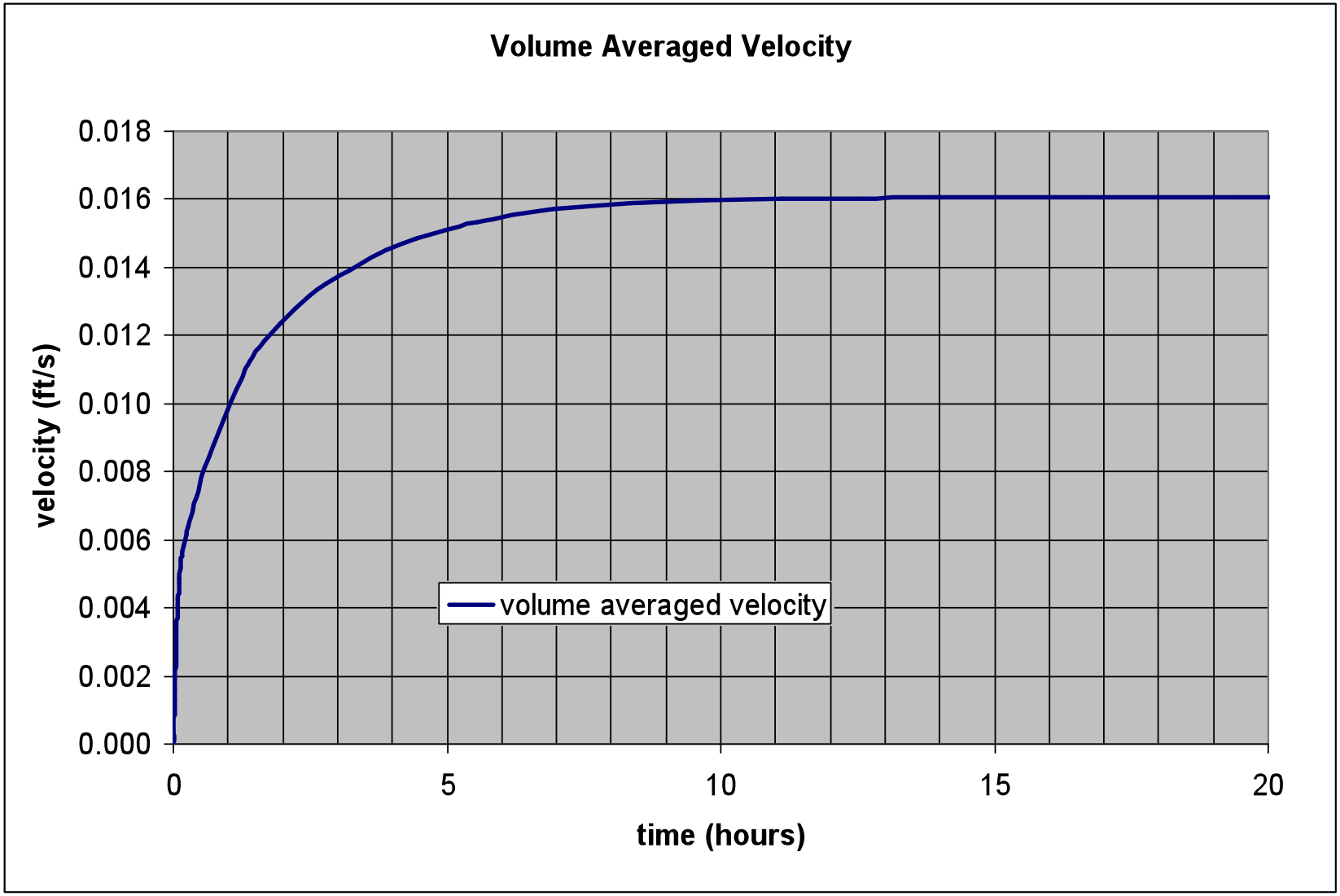


The CFD model took approximately 170 hours of CPU time to complete. The plot here shows volume averaged velocity as a function of flow time (not to be confused with CPU time) and shows the history over 20 hours. Note that after about 10 hours, the average velocity in the tank volume is getting quite close to what it will be once the system reaches a steady state.

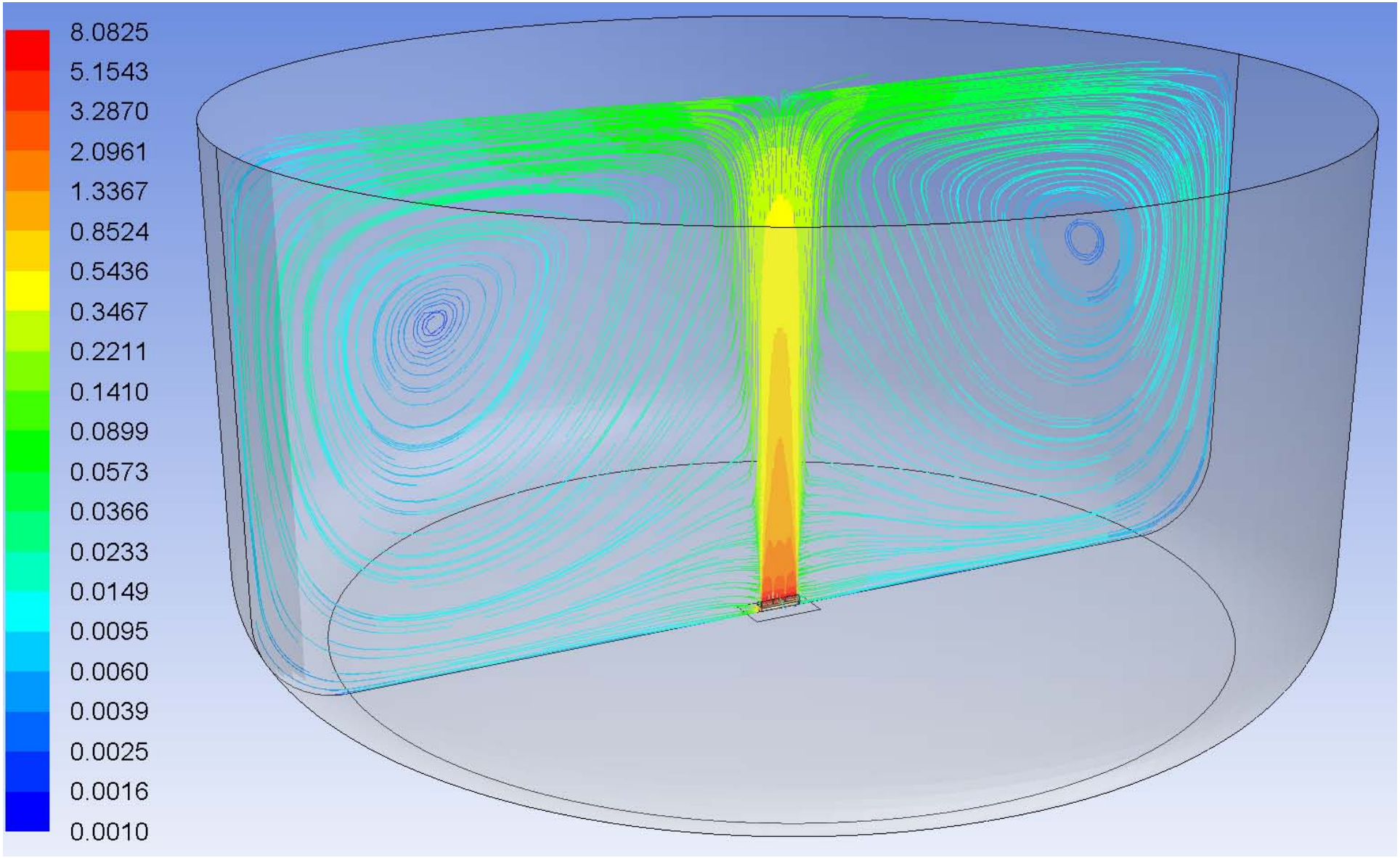


Steady state flow pattern

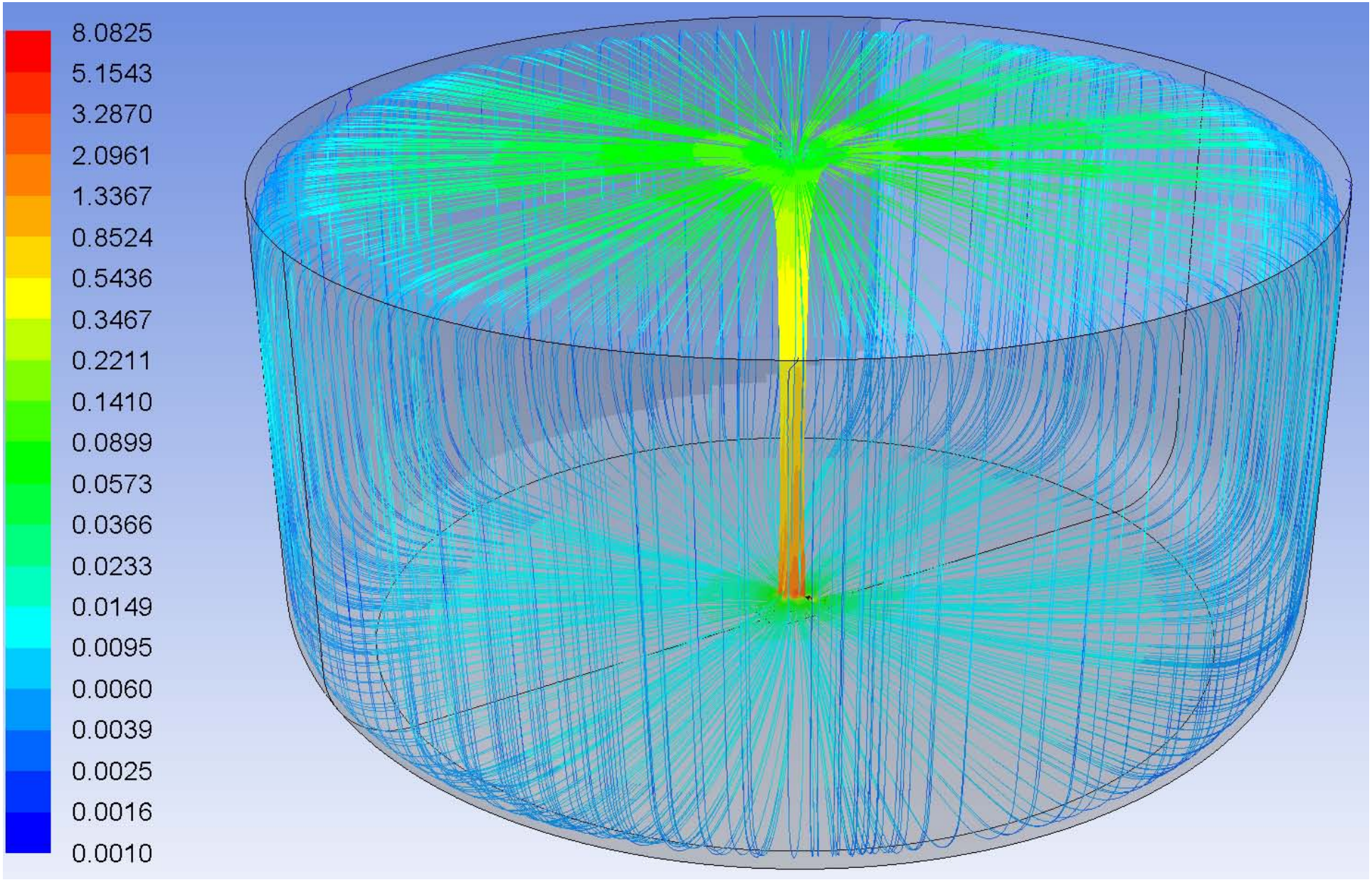


Steady state flow pattern

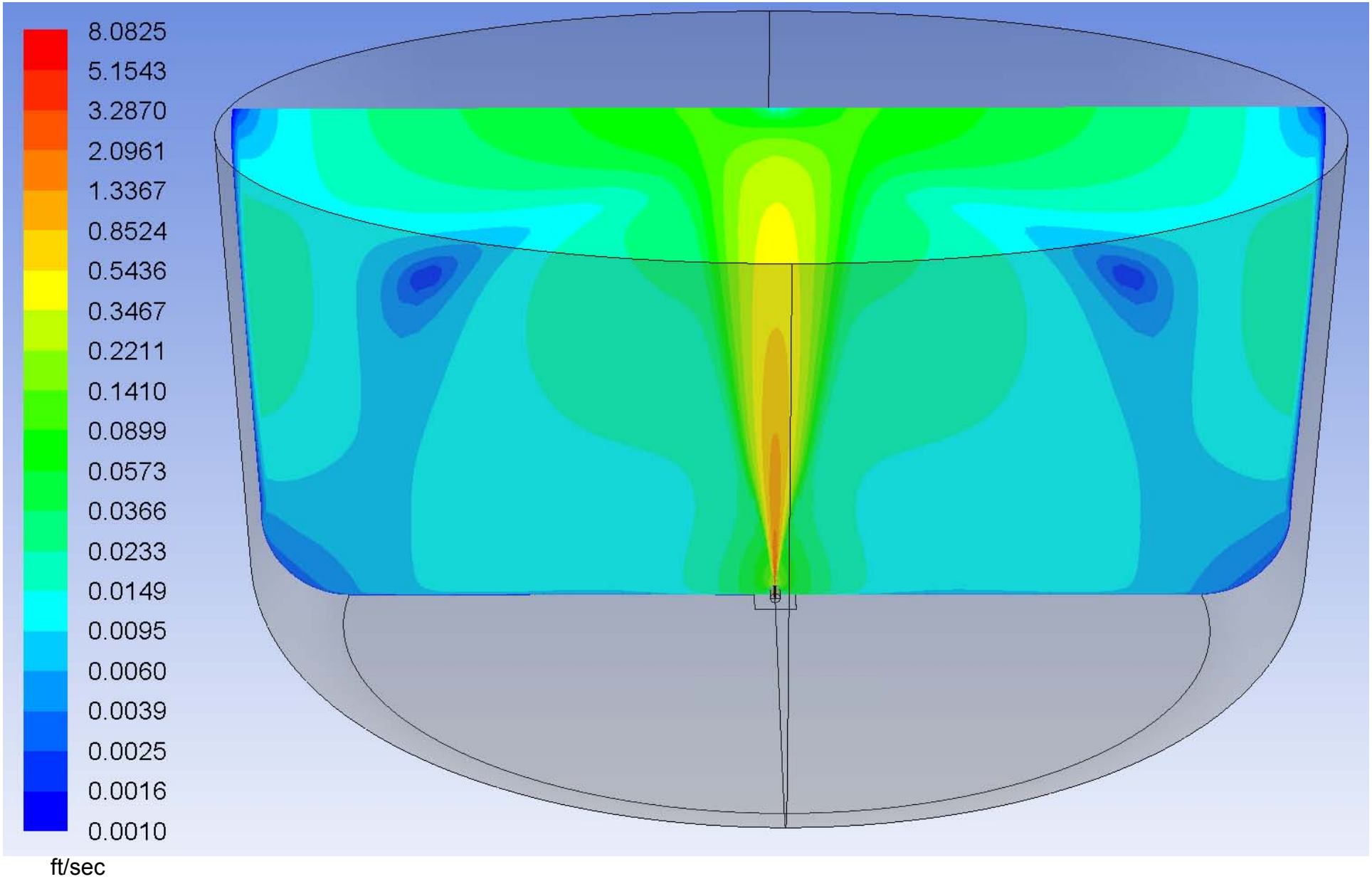


Steady state flow pattern

(cut across G-12 unit)

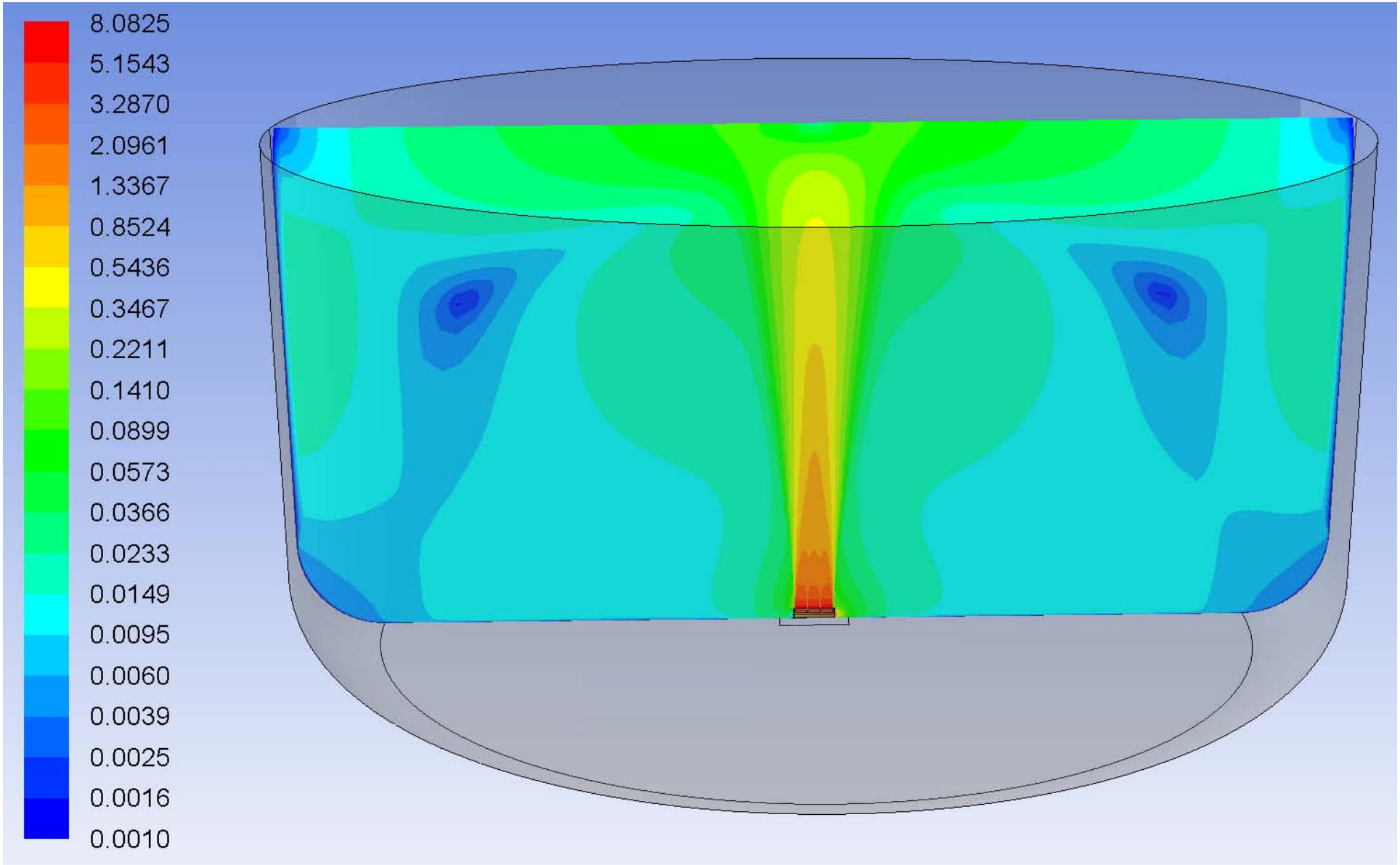


Steady state flow pattern

(cut lengthwise through G-12 unit)

KLM ENGINEERING, INC.
TERMS AND CONDITIONS

1. BASIC SERVICES. The scope of KLM's work is described in the attached proposal or contract agreement and may not be expanded or reduced except by mutual agreement in writing.

2. ADDITIONAL SERVICES. Additional work or services shall not be performed without a duly executed change order or purchase order outlining the scope of additional work on services.

3. OWNER'S RESPONSIBILITIES. OWNER shall fully disclose to KLM its knowledge of the condition of the structure and its past and present contents and shall provide KLM with full information regarding the requirements for the project; shall designate an individual to act on OWNER'S behalf regarding the project. If necessary, shall clean and make the structure safe for entry; shall furnish the service of other consultants (including engineers, insurance consultants, accountants, attorneys, etc.) when those services are reasonable required or are reasonably requested by KLM; shall test for pollution and hazardous materials when required by law or requested by KLM; and shall provide all necessary permits and other authorization.

4. SAFETY. KLM shall only be responsible for safety of KLM personnel at the work site. The Owner or other persons shall be responsible for the safety of all other persons at the site. Owner shall inform KLM of any known or suspected hazardous materials or unsafe conditions at the work site. If, during the course of the work, such materials, or conditions are discovered, KLM reserves the right to take measures to protect KLM personnel and equipment or to immediately terminate services. Owner agrees to be responsible for payment of such additional protection costs. Upon such discovery, KLM agrees to immediately notify the Owner in writing, of the hazardous materials or unsafe conditions.

5. HAZARDOUS MATERIALS. Unless agreed in the scope of work KLM has no responsibility for the discovery, presence, handling, removal or disposal of or exposure of persons to hazardous materials at the project site. To the full extent permitted by the law, OWNER shall defend and indemnify KLM and its employees from all claims, including costs and attorney fees, arising out of the presence of hazardous materials on the job site.

6. SITE ACCESS AND RESTORATION. Owner will furnish KLM safe and legal site access. It is understood by Owner that in the normal course of work, some damage to the site or materials may occur. KLM will take reasonable precautions to minimize such damage. Restoration of the site is the responsibility of the Owner, unless agreed to in the scope of work.

7. STANDARD OF CARE. KLM will perform services consistent with the level of care and skill normally performed by other firms in the profession at the time of this service and in the geographic area, and under similar budgetary constraints. No other warranty is implied or intended.

8. SCHEDULING. Prior to scheduling the OWNER shall furnish a written purchase order or request for the services required and shall give as much notice as possible in advance of the time when the services are desired. Our ability to respond to such an order will depend upon the amount of advance notice provided. If an inspection is canceled or delayed after KLM personnel and/or equipment are in transit to the work site, then the OWNER shall be billed, according to the TERMS AND CONDITIONS, for costs incurred by KLM.

9. INSURANCE. KLM will maintain worker's compensation insurance and comprehensive general liability insurance and will provide OWNER with a certificate of insurance upon owner's request.

10. PAYMENT, INTEST AND BREACH. KLM will submit itemized monthly or other periodic invoices for work previously performed. Invoices are due upon receipt. OWNER will inform KLM of invoice questions or disagreements within 15 days of invoice date, unless so informed, invoices are deemed correct. OWNER shall make payment within 30 days after receiving each statement, and overdue payments will bear interest at 1.5 percent per month if OWNER is a business entity and at the legal rate of interest of the state in which the project is located if OWNER is a consumer. If any invoice remains unpaid for 60 days, such non-payment shall be a material breach of this agreement. As a result of such material breach, KLM may, at its sole option, suspend all duties to the Owner or other persons, without liability. Owner will pay all KLM collection expenses and attorney fees relating to past due fees, which the Owner owes under this agreement.

11. MUTUAL INDEMNIFICATION. Except as to matters actually covered by insurance purchased by KLM. KLM agrees to hold harmless and indemnify OWNER from and against liability arising out of KLM's negligent performance of the work, subject to any limitations, other indemnification's or other provisions OWNER and KLM have agreed to in writing. Except as to matters actually covered by insurance purchased by OWNER, OWNER agrees to hold harmless and indemnify KLM from and against liability arising out of OWNER'S negligent conduct, subject to any limitations, other indemnification's or other provisions OWNER and KLM have agreed to.

12. LIMITATION OF LIABILITY. OWNER agrees to limit KLM's liability to OWNER arising from professional acts, errors or omissions, such that the total aggregate liability of KLM does not exceed KLM's project fees except as to matters actually covered by insurance purchased by KLM.

13. DELAYS. If KLM work delays are caused by Owner, work of others, strikes, natural causes, weather, or other items beyond KLM's control, a reasonable time extension for performance of work shall be granted, and KLM shall receive an equitable fee adjustment.

14. TERMINATION. After 7 days written notice, either party may elect to terminate work for justifiable reasons. In this event, the OWNER shall pay for all work performed, including demobilization and reporting costs to complete the file project and reports to OWNER.

15. SEVERABILITY. Any provisions of this agreement later held to violate a law or regulation shall be deemed void, and all remaining provisions shall continue in force. However, OWNER and KLM will in good faith attempt to replace an invalid or unenforceable provision with one that is valid and enforceable, and which comes as close as possible to expressing the intent of the original provision.

16. KLM'S DOCUMENTS. All reports, specifications, drawings and other documents furnished by KLM are part of KLM's services to OWNER for use only for the project, and KLM retains all ownership of said documents regardless of whether the project is completed. OWNER may retain copies for reference in connection with the use and occupancy of the project; but KLM does not represent that the documents are suitable for reuse on extension of the project or on other projects. OWNER and others shall not use the documents on other projects or extensions of this project except by KLM's written agreement. OWNER will defend and indemnify KLM from all claims or losses arising out of the unauthorized use of the documents.

17. ARBITRATION. Any controversy or claim for money damages arising out of or relating to the making or performance or interpretation of this AGREEMENT, or the breach of this AGREEMENT, shall be settled by arbitration in accordance with the Construction Industry Arbitration Rules of the American Arbitration Association. The arbitration panel shall consist of three arbitrators, at least one of who is a structural engineer; and the panel may award only money damages and shall not award equitable relief. Judgment upon the arbitration award may be entered in any court having jurisdiction of the parties. The enforceability of these arbitration provision and arbitration awards will be governed by the Federal Arbitration Act.

18. ARBITRATION FEES. The prevailing party to any dispute arising out of this AGREEMENT shall be entitled to recover its reasonable fees and costs from the other party.

19. JOB SITE IMAGES, PHOTOGRAPHY AND VIDEO. During the term of this contract and thereafter, KLM has permission to take still photographs or video of the site for training, documentation, education or promotional purposes. A signed agreement constitutes the Owner's written permission to use the photographic image or video in the manner described herein. The only identifiable information to be used by KLM will be the Owner's name as displayed on the image. Acceptance of these terms and conditions is considered a legal release by the Owner allowing KLM to use of photographic images as described herein.

C:\winword\Terms & Cond., proposal.
11/1997

# CITY OF MERRILL

## BOARD OF PUBLIC WORKS

## MINUTES • WEDNESDAY MARCH 27, 2019

**Regular Meeting** | **City Hall Council Chambers** | **5:30 PM**

1. Call to Order

Mayor Woellner called the meeting to order at 5:30 P.M.

| Attendee Name | Title | Status | Arrived |
|---|---|---|---|
| Rob Norton | Alderperson - Seventh District | Present | |
| John M. Van Lieshout | Alderperson - Fifth District | Absent | |
| Derek Woellner | Mayor | Present | |
| Steve Hass | Alderperson - Second District | Present | |

Other attendees included: Public Works Director/City Engineer Rod Akey, Street Superintendent Dustin Bonack, Street & Weed Commissioner Ron Liberty, Building Inspector/Zoning Administrator Darin Pagel, City Attorney Tom Hayden, Tyler Torkelson, Tom English and City Clerk Bill Heideman. A representative from Merrill Productions was present to videotape the meeting.

2. Preliminary items:

1. Vouchers

The vouchers were in the meeting packet.

Motion (Hass/Norton) to approve.

**RESULT:** **APPROVED**

3. Other agenda items for consideration:

1. Petition to vacate alley - Merrill Historical Society (between 3rd & 4th Street)

The petition and a related draft resolution were in the meeting packet. This petition and resolution will also be considered at by the City Plan Commission at their April 3rd meeting.

Motion (Hass/Norton) to approve.

**RESULT:** **APPROVED**

2. Request from Tyler Torkelson to discuss snow removal charges for 2018 at 111 Oregon Street.

Tyler Torkelson distributed information and then addressed the board. He explained that he was working with his father on addressing snow removal issues, but somehow this did not get resolved. The bills are from 2018, and the total charges are $800.

Motion (Hass/Norton to disallow the request.

Attachment: Committee Reports (4073 : Fie committee reports)

| RESULT: | DISALLOWED |
|---|---|

3. Discuss locations for Rapid Flashing Beacon traffic control (Prospect & Main, Foster & Main).

No information was in the meeting packet.

Alderman Hass asked for a cost estimate. He was told that the cost would be approximately $7,000 per "set".

Traffic information related to the intersection of Foster and Main is still be gathered.

Alderman Hass stated that, although the controls might be beneficial, they are also costly.

It was suggested that this controls be included in the discussion when preparing the 2020 budget.

No action was taken at this time.

4. Discus replacing pavers on south side of East First Street (800 Block).

No information was in the meeting packet.

Street Superintendent Bonack reported that the pavers on the north side were removed on 2018. Plans are to continue paver removal in this area.

No action was necessary, requested or taken.

5. Discuss sidewalk program with the possibility of Street Department completing two blocks of proposed 2019 area.

No information was in the meeting packet.

Public Works Director/City Engineer Akey reminded everyone that all bids on the 2019 sidewalk maintenance project were rejected. He is now proposing that the Street Department could be responsible for two blocks of sidewalk installation in 2019, to determine the feasibility of using the Street Department for sidewalk maintenance. There was no objection to that proposal. No formal action was taken.

6. Discuss condition of Jackson Street (Eugene to Foster Street), rapid deterioration over spring break up. Possibly delay Poplar and Court Street project until 2020 and reconstruct Jackson Street in 2019.

No information was in the meeting packet.

Alderman Hass stated that he has driven to Jackson Street, and that it definitely needs work soon.

Attachment: Committee Reports (4073 : Fie committee reports)

Alderman Norton suggested that. If the Poplar Street and Court Street projects are delayed until 2020, the property owners in those project areas should be "given a break" on their eventual special assessment bill, to avoid anticipated cost increases from 2019 to 2020.

Motion (Norton/Hass) to approve a project to reconstruct Jackson Street, and delay the N. Poplar Street (East Second Street East Fourth Street) Project and the N. Court Street (East Second Street to East Fifth Street) Project until 2020.

| | | |
|---|---|---|
| **RESULT:** | **APPROVED & SENT TO COUNCIL** | **Next: 4/9/2019 7:00 PM** |

7. Discuss discontinuing placing of sand barrels in areas throughout the city.

No information was in the meeting packet.

Street Superintendent Bonack explained that it appears that placing sand barrels has led to the City "subsidizing" sidewalk materials for some people. He added that is does take time and money to install the barrels and ensure a steady and sufficient supply of sand.

Mayor Woellner stated that he would not be opposed to having sand available at certain City locations.

Discussion on this will continue at the September meeting. No action was taken at this time.

8. Discuss status of re-siding Street Department Garage.

No information was in the meeting packet.

Street Superintendent Bonack provided a verbal update on the project. Window measurements are currently be done.

4. Monthly Reports:

1. Public Works Director/City Engineer Akey

The monthly report was in the meeting packet.

Public Works Director/City Engineer Akey reported that bids on the M2019-01 East Main Street (Memorial Drive to Pine Ridge Avenue) Project will be brought directly to the April 9th, 2019 Common Council meeting for consideration.

2. Building Inspector/Zoning Administrator Pagel

The monthly report was in the meeting packet.

Building Inspector/Zoning Administrator Pagel reported that, with the onset of spring, exterior maintenance and garbage issues have begun to surface.

3. Street Superintendent Bonack

The monthly report was in the meeting packet.

Attachment: Committee Reports (4073 : Fie committee reports)

Street Superintendent Bonack reported that the Overtime account will be over budget.

4. Street & Weed Commissioner Liberty

The monthly report was in the meeting packet.

Street & Weed Commissioner Liberty reviewed the report.

5. Consider placing monthly reports on file

Motion (Hass/Norton) to place on file.

| | |
|---|---|
| **RESULT:** | **PLACED ON FILE** |

5. Establish date, time and location of next regular meeting

Wednesday, April 24th, 2019 at 5:30 P.M. in the City Hall Common Council Chambers.

6. Public Comment Period

Tom English stated that he appreciated the sand barrels at various locations, but could live without them if they are removed. He suggested perhaps designating central location(s) for picking up sand.

Tom English then thanked the Street Department for their help in resolving a drainage issue at his residence. He stated that he would not oppose the installation of curb and gutter at his resident if that project is proposed.

7. Adjournment

Motion (Norton/Hass) to adjourn. Carried. Adjourned at 6:13 P.M.

Attachment: Committee Reports (4073 : Fie committee reports)

# CITY OF MERRILL

## CITY PLAN COMMISSION

## MINUTES • WEDNESDAY APRIL 3, 2019

**Regular Meeting** | **City Hall Council Chambers** | **5:45 PM**

I. Call to Order

Mayor Woellner called the meeting to order at 5:45 P.M.

| Attendee Name | Title | Status | Arrived |
|---|---|---|---|
| Ralph Sturm | | Present | |
| Melissa Schroeder | | Present | |
| Ken Maule | | Present | |
| Robert Reimann | | Excused | |
| Derek Woellner | Mayor | Present | |
| Steve Hass | Alderperson - Second District | Present | |

Others in attendance: City Administrator Dave Johnson, City Attorney Tom Hayden, Public Works Director/City Engineer Rod Akey, Building Inspector/Zoning Administrator Darin Pagel, Alderman Rob Norton, Pat Burg and City Clerk Bill Heideman. A representative from Merrill Productions was present to videotape the meeting.

Attendees at the hearing: Dan Kohhouse and Paul Wegener.

II. Minutes of previous meeting(s):

1. Minutes of October 8, 2018 meeting

The minutes were in the meeting packet.

Motion (Schroeder/Sturm) to approve.

**RESULT: APPROVED**

III. Agenda items for consideration:

1. Petition from Merrill Historical Society to vacant an alley between East Third Street and East Fourth Street. The Board of Public Works recommends approval.

Information was in the meeting packet. At a meeting on March 27th, 2019, the Board of Public Works recommended approving the petition.

Ralph Sturm suggested that the alley vacation could begin at the street. After discussion, it was decided that this further vacation could be considered in the future.

Note: If the petition is approved, it will be considered at the June 11th, 2019 Common Council meeting, after all publication requirements have been met. A public hearing on the petition for alley vacation will be held at that meeting.

Motion (Hass/Schroeder) to approve.

Attachment: Committee Reports (4073 : Fie committee reports)

| RESULT: | APPROVED & SENT TO COUNCIL | Next: 6/11/2019 7:00 PM |
|---|---|---|

2. Ordinance amendment to allow Park and Rec to select their City Plan member. The Parks and Recreation Commission recommends approval.

The proposed ordinance was in the meeting packet. At a meeting on March 6th, 2019, the Parks and Recreation Commission recommended allowing the Parks and Recreation Commission to elect their representative on the City Plan Commission, rather than having the Parks and Recreation Commission Chairperson automatically be a member of the City Plan Commission.

City Attorney Hayden raided the issue of a City residency requirement. Alderman Hass suggested that language be added to require the Parks & Recreation Commission representative on the City Plan Commission to be a City resident. Without objection, that amendment will be made to the proposed ordinance.

Motion (Hass/Sturm) to approve.

| RESULT: | APPROVED & SENT TO COUNCIL | Next: 4/9/2019 7:00 PM |
|---|---|---|

IV. Monthly Report(s):

1. Oral report from Building Inspector/Zoning Administror Pagel on Approvals/Disapprovals of Certified Survey Maps

Building Inspector/Zoning Administrator Pagel reported that one survey map was approved last month.

V. Recess:

At 5:55 P.M., Mayor Woellner announced a recess until 6:00 P.M., the scheduled time for the public hearing.

At 6:00 P.M., Mayor Woellner called the meeting back to order.

VI. Public Hearing (will begin at 6:00 P.M.)

1. Zoning amendment application from C & D Excavating to rezone, from R-2 to Industrial, a vacant parcel on Alexander Street, for a tree farm.

City Attorney Hayden read the public hearing notice.

Building Inspector/Zoning Administrator Pagel provided historical information on the property and gave a verbal review of the rezoning application.

Motion (Hass/Schroeder) to open the public hearing. Carried.

Dan Kolhouse spoke in favor of the rezoning.

Motion (Hass/Schroeder) to close the public hearing. Carried.

Motion (Maule/Hass) to approve the rezoning application and related ordinance. If approved, the ordinance will be considered at the April 9th, 2019 Common Council meeting.

| RESULT: | APPROVED & SENT TO COUNCIL | Next: 4/9/2019 7:00 PM |
|---|---|---|

## VII. Public Comment Period

Representing Our Saviour's Church, Paul Wegener reported that the church has no problem with the alley vacation, as long as the garage on private property is not blocked.

## VIII. Establish date, time and location of next meeting

The next meeting will be at the call of the Chairperson.

## IX. Adjournment

Motion (Hass/Sturm) to adjourn. Carried. Adjourned at 6:07 P.M.

Attachment: Committee Reports (4073 : Fie committee reports)

# CITY OF MERRILL

## FESTIVAL GROUNDS COMMITTEE

## MINUTES • THURSDAY MARCH 7, 2019

**Regular Meeting** | **Bierman Building** | **6:00 PM**

I. Call to Order

Alderman Norton called the meeting to order at 6:00 P.M.

| Attendee Name | Title | Status | Arrived |
|---|---|---|---|
| Michael Caylor | Food Vendor Rep. | Present | |
| Rob Norton | Alderperson - Seventh District | Present | |
| Tim Meehean | Alderperson - Eighth District | Present | |
| John M. Van Lieshout | Alderperson - Fifth District | Present | |
| Derek Woellner | Mayor | Absent | |
| Bryan Bloch | Rodeo Assn. Rep. | Present | |
| Brad Becker | Fair Assn. Rep. | Present | 6:10 PM |

Also in attendance: City Administrator Dave Johnson, City Attorney Tom Hayden, Festival Grounds Manager Richard Bjorklund, Diane Wais, Ron Liberty, Bill Bialecki, Jerry Leopold, Colton VanLieshout and City Clerk Bill Heideman. A representative from Merrill Productions was present to videotape the meeting.

II. Minutes of previous meeting(s):

1. Minutes of December 6, 2018 meeting

The minutes were in the meeting packet.

Motion (Van Lieshout/Bloch) to approve.

**RESULT: APPROVED**

III. Agenda items for consideration:

1. Bierman Grant Discussion - Sell Building/Bathroom

City Administrator Johnson reported on funds that will be received from the Bierman Foundation. The Fair Association will be receiving Bierman Foundations funds for new lights. The City will be receiving $80,000 for work on the Sell Building and $20,000 earmarked for restroom work.

2. Labor Day - Mobil Food Vendors/Contract

The contract was in the meeting packet.

The Parks and Recreation Commission has established a $25 fee for mobile food vendors for Labor Day only. This fee pertains to mobile food vendors only, not craft or other non-food vendors.

Motion (Bloch/Meehean) to establish a $100 fee for mobile food vendors setting up on the grounds for Labor Day festivities. Payment in advance would be required. Motion carried.

Attachment: Committee Reports (4073 : Fie committee reports)

Ron Liberty (Merrill Lions) and Festival Grounds Manager Bjorklund will work together on issues related to this subject. Consideration of the contract will continue at the April meeting.

3. Proposal - Fourth of July returning to Merrill Festival Grounds

The proposal was in the meeting packet. Food Vendor Rep. Caylor reported on the proposal.

City Administrator Johnson reported that the Lincoln County Humane Society is not in favor of having fireworks at the Festival Grounds on the Fourth of July. Food Vendor Rep. Caylor responded that he was told by a humane society official that the humane society would have no problem with the fireworks being held on the grounds.

Alderman Meehean stated that, because the Parks and Recreation Commission is responsible for the Fourth of July activities, Parks and Recreation Commission input on this matter should be obtained.

City Administrator Johnson reported that, due to new federal regulations, the company responsible for the fireworks show would not legally be able to produce the fireworks show on the grounds. He was asked to obtain these new regulations in writing from the fireworks company, for consideration at the April meeting.

No action on the proposal was taken.

4. Calendar of Events

The calendar was in the meeting packet. Diane Wais reviewed the calendar.

IV. Monthly Reports:

1. Festival Grounds Manager Bjorklund

The monthly report was in the meeting packet.

Festival Grounds Manager Bjorklund reviewed the report. Tractor pull officials are planning to expand entertainment. Discussion on booking wrestling show(s) is ongoing.

2. Food Vendor Rep. Caylor - No report, because Food Vendor Committee did not meet.

Food Vendor Rep. Caylor reported that the Food Vendor Group will probably resume monthly meetings, likely starting in April. The group has been working on making purchases as a group, in order to save money.

V. Public Comment Period

Fair Association Rep. Becker presented verbal updates on subjects related to the fair.

VI. Establish date, time & location of next meeting

Thursday, April 4th, 2019 at 6:00 P.M. in the Bierman Building Conference Room.

VII. Adjournment

Motion (Becker/Van Lieshout) to adjourn. Carried. Adjourned at 6:50 P.M.



Attachment: Committee Reports (4073 : Fie committee reports)

# CITY OF MERRILL

## HEALTH AND SAFETY COMMITTEE

## MINUTES • MONDAY MARCH 25, 2019

**Regular Meeting** | **City Hall Council Chambers** | **5:00 PM**

I. Call to Order

Alderman Sukow called the meeting to order at 5:00 P.M.

| Attendee Name | Title | Status | Arrived |
|---|---|---|---|
| Dave Sukow | Alderperson - Sixth District | Present | |
| Rick Blake | Alderperson - Third District | Excused | |
| John M. Van Lieshout | Alderperson - Fifth District | Present | |

Also in attendance: City Administrator Dave Johnson, Fire Chief Josh Klug, Police Lieutenant Don Seubert, Deputy Health Officer Norbert Ashbeck, Alderman Steve Hass, Alderman Rob Norton (arr. 5:05) Don Swan and City Clerk Bill Heideman. A representative from Merrill Productions was present to videotape the meeting.

II. Nuisance Complaints and Vouchers:

1. Nuisance Complaints

The nuisance complaints summary report was in the meeting packet.

Deputy Health Officer Ashbeck reported that all cases except one are self-explanatory. The case that is the exception is proceeding through the court system. It is anticipated that the building in that case will eventually be condemned.

2. Vouchers

The vouchers was in the meeting packet.

Motion (Van Lieshout/Sukow) to approve.

**RESULT:** **APPROVED**

III. Picnic and/or Liquor License Applications:

1. Application from DSwan LLC, Dawn R. Swan, Agent, for a Class "B" (Beer) license for First Street Coffee Station, 809 East First Street, effective April 10th, 2019.

Police Lieutenant Seubert reported that Police Chief Bennett has no concerns with the application.

Motion (Sukow/Van Lieshout) to approve.

**RESULT:** **APPROVED & SENT TO COUNCIL** **Next: 4/9/2019 7:00 PM**

2. Application from DSwann LLC, Dawn R. Swan Agent, for a Class "B" (Beer) and Class C (Wine) license for First Street Coffee Station, 501 S. Pine Ridge Avenue, effective April 10th, 2019.

Attachment: Committee Reports (4073 : Fie committee reports)

Police Lieutenant Seubert reported that Police Chief Bennett has no concerns with the application.

Motion (Van Lieshout/Sukow) to approve.

| | | |
|---|---|---|
| **RESULT:** | **APPROVED & SENT TO COUNCIL** | **Next: 4/9/2019 7:00 PM** |

3. Change of Agent Application from Heartland Cooperative Services (Merrill Cenex), 1300 N. Center Avenue, naming Becky Guite as agent.

Police Lieutenant Seubert reported that Police Chief Bennett has no concerns with the application.

Motion (Van Lieshout/Sukow) to approve.

| | | |
|---|---|---|
| **RESULT:** | **APPROVED & SENT TO COUNCIL** | **Next: 4/9/2019 7:00 PM** |

IV. Other agenda items to consider:

None.

V. Monthly Reports:

1. Minutes of February 25, 2019 meeting

The report was in the meeting packet.

Motion (Sukow/Van Lieshout) to approve.

| | |
|---|---|
| **RESULT:** | **APPROVED** |

2. Monthly Report - Fire Chief Klug

The report was in the meeting packet.

Fire Chief Klug reported on the new report format and then reported on the report in general. He then made comments and answered questions related to an ambulance that has operational issues.

3. Monthly Report - Police Chief Bennett

The monthly report was in the meeting packet.

Police Lieutenant Seubert reported that February was a busy month for the Police Department. The amount of snowfall led to an increase in traffic-related issues and crashes.

The Police Department participated in several special assignments during the month. In-service training is ongoing.

Police Chief Seubert reviewed call statistics and arrest statistics.

4. Monthly Report - Lincoln County Humane Society

The monthly report was in the meeting packet.

Attachment: Committee Reports (4073 : Fie committee reports)

5. Consider placing monthly reports on file

Motion (Van Lieshout/Sukow) to place on file.

| | |
|---|---|
| **RESULT:** | **PLACED ON FILE** |

VI. Establish date, time and location of next regular meeting

Monday, April 22nd, 2019 at 5:00 P.M. in the City Hall Common Council Chambers.

VII. Public Comment Period

None.

VIII. Adjournment

Motion (Van Lieshout/Sukow) to adjourn. Carried. Adjourned at 5:17 P.M.

Attachment: Committee Reports (4073 : Fie committee reports)

MARCH '19 MEETING MINUTES
**Merrill Enrichment Center Committee**
Meeting was held on March 21st, 2019 at 3:15pm
Merrill Enrichment Center Conference Room – 303 N. Sales Street

*Present*: Gene Bebel, Mollie Stencil, Sharon Harvey, Jennifer Clark (ADRC Representatives)
*Absent*: Rev. Kyle Carnes (Chair), Paul Russell (Alderperson), Rose Akey, Emily Weix

1. **Opening**
   a. Mrachek called the meeting to order without a quorum.
2. **Consent Items**
   a. Motion made by Bebel, second by Harvey to approve January '19 meeting minutes. Motion carried.
   b. Motion made by Harvey, second by Bebel to approve monthly vouchers. Motion carried.
3. **Public Comment**
   a. Bebel spoke as voice for the public that our driveway from the MEC east parking lot to 6th street is above ground level and may need to be tapered down to avoid issues.
4. **ADRC**
   a. Jennifer informed us of the upcoming 2019 classes beginning and running on the same day include "Living with Chronic conditions (am session) and Healthy Living with Diabetes (afternoon session) May 2nd-June 6th. Medicare Basics is coming up in April.
5. **Planning**
   a. Mrachek reviewed Capital Plan for MEC/Expo. Needs are very little for this department.
   b. Mrachek discussed with Committee how the MEC can contribute to the City's overall Strategic Plan. Given the recommended strategic objectives, the MEC provides service excellence, financial sustainability, and contributes to a vibrant economy.
   c. Goals for 2019 include increasing participation by 10% including the number of men taking part in our offerings, increasing evening programming, and closer partnerships with MAPS. We will be asking for suggestions from our current participants and trying to reach residents who have yet to visit the MEC.
   d. Director asked committee members to commit to another term and/or provide suggestions for new members.
6. **Discussion**
   a. Director informed committee that interviews would be taking place in the next few weeks for the assistant position.
7. **Adjournment**
   a. Motion to adjourn made by Bebel second by Stencil.

Next meeting date is **April 18th at 3:15pm in the MEC Conference room.**
*Vouchers will be available for review 15 minutes prior to meeting time.*

*Respectfully submitted,*

TMrachek

Tammie Mrachek
MEC Director

*Enrichment Center Mission Statement: Dedicated to Enhancing Lives and Bringing Generations Together*

Attachment: Committee Reports (4073 : Fie committee reports)

# PARKS AND RECREATION COMMISSION

April 3, 2019

The Merrill Parks and Recreation Commission met on Wednesday, April 3, 2019 at 4:15 p.m. at the Merrill City Hall.

Members Present: Kyle Gulke, Joan Tabor, Brian Artac, Dave Sukow, Kate Baker, Jean Ravn and Dan Novitch.

Members Excused Absent:

Department Staff Present: Dan Wendorf and Dawn Smith

Visitors: City Administrator Dave Johnson, Ron Liberty, Mayor Derek Woellner, Judy Sukow, Bradly Gulke and MP3:

***Motion by Baker, seconded by Ravn to approve the minutes from the March meeting.

***Carried unanimously.

***Motion by Ravn, seconded by Baker, to approve the claims from March.

Sukow questioned how much the lights costed at Athletic Park stating the paper had a number in there that didn't sound correct. Wendorf stated that there was a $45,000 grant through Baseball Tomorrow Fund and a $5,000 grant through WPS Foundation. Wendorf stated that there is LED lights that were put in and the cost on savings will make up for the cost of the project. Novitch questioned how old the poles were that were in there. Wendorf stated 50 plus years old. Artac stated the cost to Cesa 9 was for the help in writing the grant. Artac stated that it was a mis quote on how many night games are played at Athletic Park, Ravn stated that all the money used to purchase the Easter candy was through donations.

***Carried unanimously.

Public Comment:

Ron Liberty from the Merrill Lions Club stated that they will still have the BBQ Chicken Dinner and the duck races on August 8 at Stange Park.

Bradley Gulke, 1504 Jackson Street, stated that the Disc Golf courses at Kitchenette Park and Stange Park are in need of putting the poles in with a concrete base so they are a little more stable. Gulke stated that they are planning on running some tournaments this summer and would like to have the courses expanded. Gulke stated the last event they had they raised some money for the food pantry.

The next item on the agenda was to elect Chairperson/Vice Chairperson. Wendorf stated that they will need someone to make a nomination for a Chairperson. Gulke stated that he would like to nominate Artac, stating that he has been doing a good job. Artac stated that he did not want to be Chairperson.

***Sukow made a motion, seconded by Baker, to nominate Novitch for Chairperson for the Park and Recreation Commission.

Attachment: Committee Reports (4073 : Fie committee reports)

***Carried unanimously.

***Gulke made a motion, seconded by Tabor, to nominate Artac for Vice Chairperson for the Park and Recreation Commission.

***Carried unanimously.

The next item on the agenda was to review/approve the bids for Smith Center Dehumidifiers. Wendorf stated they received one bid from Mechanical Inc. for $52,900.00. Wendorf stated that the bid was well under budget and that one bid was not out of the ordinary because they are specialized pieces of equipment.

***Motion by Sukow, seconded by Novitch, to approve the bid from Mechanical Inc. for $52,900.00.

***Carried unanimously.

The next item on the agenda was continued discussion on 2020 Capital & Operating Budgets. Wendorf stated that he enclosed a copy of the some the ideas from the 5 Year Plan from the Park and Recreation Department. Gulke questioned who was responsible for the canoe portage on the RBT. Wendorf stated that WPS is so any repairs would need to be done by them. Baker would like to see the lines repainted at Ott's Park Tennis Courts for Pickle Ball. Wendorf stated that they repaint them every two years, so they will be painted this year. Wendorf stated that if anyone ever has any questions or ideas to please call him.

The next item on the agenda was monthly reports. Wendorf asked if anyone had any questions. Novitch questioned if Oak wilt is in Lincoln County yet. Wendorf stated it was not in our area. Ravn stated that the date for the History Hunt was misquoted in the monthly report. The History Hunt is April 27th. Wendorf also stated that the dog show is this weekend at the Smith Center.

***Motion by Sukow, seconded by Ravn to approve the monthly board report given by Wendorf.

***Carried unanimously.

The next regular meeting is scheduled for Wednesday, May 1, 2019 at 4:15 p.m. at the Smith Center,

Public comment: none

***Motion by Sukow, seconded by Baker to adjourn at 5:00 p.m.

***Carried unanimously.

Dawn Smith
Recording Secretary

Attachment: Committee Reports (4073 : Fie committee reports)

# CITY OF MERRILL

## PERSONNEL AND FINANCE COMMITTEE

## MINUTES • TUESDAY JANUARY 8, 2019

**Special Meeting** | **City Hall Council Chambers** | **5:30 PM**

I. Call to Order

Alderman Russell called the meeting to order at 5:30 P.M.

| Attendee Name | Title | Status | Arrived |
|---|---|---|---|
| Tim Meehean | Alderperson - Eighth District | Present | |
| Paul Russell | Alderperson - First District | Present | |
| Steve Osness | Alderperson - Fourth District | Present | |

Other attendees included: Mayor Derek Woellner, City Administrator Dave Johnson, Finance Director Kathy Unertl, City Attorney Tom Hayden, Alderman John Van Lieshout, Alderman Steve Hass, Alderman Dave Sukow, Alderman Rick Blake, Alderman Rob Norton, Police Chief Corey Bennett, Laura Schulte (Wausau Daily Herald), Dean Dietrich (Special Counsel for the City), Jeremy Ratliff, Diane Wais and City Clerk Bill Heideman.

II. Agenda Items:

1. Review processing and routing of Citizen Feedback Forms.

This has been an ongoing issue.

Alderman Meehean suggested that, in cases when a Citizen Feedback Form relates to both the City Administrator and the City Attorney, the form should be submitted to the Personnel and Finance Committee Chairperson.

Discussion then shifted to the routing of Citizen Feedback Forms in general. Alderman Meehean stated his opinion that all forms should be submitted to the Personnel and Finance Committee Chairperson.

Alderman Osness stated his option that form should be able to be submitted to any Common Council member. Alderman Hass agreed with Alderman Osness.

Alderman Norton agreed with Alderman Meehean.

Mayor Woellner stated that, in his opinion, forms should be able to be submitted to any alderperson.

Motion (Meehean/Russell) to establish a policy that all Citizen Feedback Forms are to be submitted to the Personnel and Finance Committee Chairperson.

Motion (Russell/Meehean) to amend the motion to establish a policy that Citizen Feedback Forms can be submitted to any voting member of the Personnel and Finance Committee. Motion to amend carried.

Attachment: Committee Reports (4073 : Fie committee reports)

Original motion, as amended, carried.

2. Acknowledge receipt of Citizen Feedback Forms.

To date, approximately 130 Citizen Feedback Forms have been completed and submitted. They will not be released to the public at this time.

Alderman Russell explained that he had decided to omit the public comment period on this agenda. In his opinion, the time normally reserved for public comment should be used for discussion with the employees referenced in the Citizen Feedback Forms.

Laura Schulte stated that, in her opinion, the closed session listed on the agenda should be conducted in open session. Dean Dietrich responded that, in his opinion, it is both appropriate and proper to convene in closed session for the purposes indicated on the agenda.

III. Closed session(s):

1. The Committee may convene in closed session pursuant to Wisconsin State Statutes Section 19.85(1)(f) to consider financial, medical, social or personal histories or disciplinary data of specific persons, preliminary consideration of specific personnel problems or the investigation of charges against specific persons which, if discussed in public, would be likely to have a substantial adverse effect upon any person referred to in such histories or data, or involved in such problems or investigations, and to review submitted Citizen Feedback Forms related to City employees.

Motion (Meehean/Osness) to convene in closed session. Motion carried 3-0 on roll call vote.

Note: The closed session portion of the meeting was held in the City Hall Basement Conference Room.

Alderpersons present were: Paul Russell, Tim Meehean, Steve Osness, Rob Norton, John Van Lieshout, Rick Blake, Dave Sukow, Steve Hass.

Also present: Mayor Derek Woellner, City Administrator Dave Johnson, City Attorney Tom Hayden, Finance Director Kathy Unertl, Attorney Dean Dietrich and Legal Assistant Diane Wais

It was requested that Attorney Dietrich with the assistance of Diane Wais prepare the minutes.

Chairman Russell introduced Attorney Dietrich and explained the reason for his presence at this meeting.

Attorney Dietrich spoke on the information received and distributed to the P&F Committee, and what steps, if any, might be taken regarding the release of the information via Public Records Requests from the media.

Attachment: Committee Reports (4073 : Fie committee reports)

Chairman Russell indicated they would start with the information received regarding Finance Director Unertl. Discussion was held on various issues regarding the information received including discussion of the budget preparation and explanation, how questions were answered and the perceived failure to distribute requested information. It was noted by City Administrator Johnson that Finance Director Unertl had received, at her latest evaluation, a written reprimand for her performance. Finance Director Unertl indicated she was sincerely sorry for what happened with the miscommunication, and indicated it will not happen again. There was further discussion about communication of information by Finance Director Unertl.

Alderman Meehean indicated, after reviewing the Citizen Feedback Forms, he had no questions for City Administrator Johnson or City Attorney Hayden and could see nothing that was done illegally or inappropriately. There were no other comments from the room. No further action was taken on City Administrator Johnson and City Attorney Hayden.

7:05 p.m. City Administrator Johnson, Finance Director Unertl and City Attorney Hayden were asked to leave for further deliberation.

A discussion relating primarily to Finance Director Unertl ensued. No further action taken at this time. An additional meeting is anticipated.

IV. Reconvene in Open Session:

1. The Committee may reconvene in open session for potential action(s) on closed session issue(s).

(Note: Although the agenda stated that the Committee may reconvene in open session, it did not.)

V. Adjournment

Motion (Meehean/Osness) to adjourn. Carried. Adjourned at 7:04 P.M.

Attachment: Committee Reports (4073 : Fie committee reports)

# CITY OF MERRILL

## PERSONNEL AND FINANCE COMMITTEE

## MINUTES • TUESDAY MARCH 26, 2019

**Regular Meeting** | **City Hall Council Chambers** | **5:00 PM**

I. Call to Order

Alderman Russell called the meeting to order at 5:00 P.M.

| Attendee Name | Title | Status | Arrived |
|---|---|---|---|
| Tim Meehean | Alderperson - Eighth District | Present | |
| Paul Russell | Alderperson - First District | Present | |
| Steve Osness | Alderperson - Fourth District | Present | |

Also in attendance: City Administrator Dave Johnson, City Attorney Tom Hayden, Fire Chief Josh Klug, Alderman Steve Hass, Alderman Dave Sukow, Alderman Rick Blake, Alderman John Van Lieshout, Alderman Rob Norton, LaDonna Fermanich, Lori Anderson-Malm, Laura Schulte, John Kraegenbrink, Paul Peterson, Dean Dietrich and City Clerk Bill Heideman. A representative from Merrill Productions was present to videotape the meeting.

II. Vouchers:

1. Vouchers

Motion (Meehean/Osness) to place on file.

**RESULT:** **PLACED ON FILE**

III. Monthly Reports:

1. Municipal Court

The monthly reports were in the meeting packet.

2. Finance Director Unertl

The monthly reports were in the meeting packet.

3. City Attoreny Hayden

The monthly reports were in the meeting packet.

4. City Clerk Heideman

The monthly reports were in the meeting packet.

5. City Administrator Johnson

The monthly reports were in the meeting packet.

City Administrator Johnson answered questions and provided additional details related to the reports.

6. Consider placing monthly reports on file

Motion (Meehean/Osness) to place on file.

Attachment: Committee Reports (4073 : Fie committee reports)

| RESULT: | PLACED ON FILE |
|---|---|

## IV. Establish date, time and location of next regular meeting

Tuesday, April 23rd, 2019 at 5:00 P.M. on the City Hall Common Council Chambers.

## V. Public Comment Period

LaDonna Fermanich commended Alderman Hass for his agenda request for discussion on a hiring freeze.

Alderman Norton responded that there is already a hiring policy in place, and he asked the Personnel and Finance Committee to deny the request for a hiring freeze.

## VI. Agenda items for consideration:

### 1. Reqeust from Alderman Hass to consider placing a hiring freeze in effect.

Alderman Hass explained that, based on the current City debt, he in not in favor of automatically filling vacant positions. He also does not want to see new positions created.

City Administrator Johnson responded that a hiring policy is already in place and that new positions require prior Common Council approval. Alderman Meehean added that the hiring freeze for vacant positions was lifted in order to speed up the process when filling positions.

Alderman Russell thanked Alderman Hass for requesting this agenda item.

No action was taken.

### 2. Grievance filed by Merrill Firefighters Local 847 related to the creation of "Lead Inspector" and "Lead Paramedic" positions.

Information related to the grievance was in the meeting packet.

Representing Merrill Firefighters Local 847, John Kraegenbrink reported that the union is of the opinion that this issue is subject to bargaining. He added that he has already discussed the grievance with both Fire Chief Klug and City Administrator Johnson.

Fire Chief Klug reported that both the City and Fire Department contend that this is not an issue subject to bargaining.

If the grievance is not resolved at this step, the next step would be arbitration.

City Administrator Johnson verbally reviewed the grievance and provided the City's response.

No action was taken at this time.

Attachment: Committee Reports (4073 : Fie committee reports)

VII. Closed Session(s):

The Committee may convene in closed session pursuant to Wisconsin State Statutes 19.85(1)(c) to consider employment, promotion, compensation, or performance data of any public employee over which the governmental body has jurisdiction or exercises responsibility, and may convene in closed session pursuant to Wisconsin State Statutes 19.85(1)(e) for deliberating or negotiating the purchase of public properties, the investing of public funds, or conducting other specified public business, whenever competitive or bargaining reasons require a closed session, in order to:

Motion (Meehean/Russell) to convene in closed session. Carried 2 to 1 on roll call vote. Voting No - Alderman Osness.

Convened in closed session at 5:31 P.M.

1. Further discuss and consider grievance filed by Merrill Firefighters Union 847 related to the creation of "Lead Inspector" and "Lead Paramedic" positions.

Discussion on the grievance continued in closed session.

2. Update on performance evaluations of City employees.

To date, the minutes have not been submitted by the minute-taker.

VIII. Reconvene in Open Session:

The Committee may reconvene in open session for potential action(s) on closed session issues.

By motion, the committee opted to reconvene in open session at 6:46 P.M.

Motion (Meehean/Russell) to deny the grievance. Carried.

IX. Discussion and possible action on financial audit

Alderman Osness has requested that, based on recent budget/tax issues, a forensic audit of City finances be approved. Alderman Meehean responded that an annual audit is already being done.

Motion (Osness/Russell) to approve a forensic audit. After discussion, Alderman Russell requested that his second be withdrawn. Without objection, it was so ordered. Per City Special Counsel Dietrich, the motion fails due to lack of a second.

Special Counsel Dietrich was instructed to conduct research to determine the status of the current (2018) audit, and to report his findings at a future meeting.

X. Adjournment

Motion (Meehean/Osness) to adjourn. Carred. Adjourned at 6:55 P.M.

Attachment: Committee Reports (4073 : Fie committee reports)

# CITY OF MERRILL

## WATER & SEWAGE DISPOSAL COMMITTEE

## MINUTES • WEDNESDAY MARCH 27, 2019

**Regular Meeting** | **City Hall Council Chambers** | **5:00 PM**

I. Call to Order

Alderman Norton called the meeting to order at 5:00 P.M.

| Attendee Name | Title | Status | Arrived |
|---|---|---|---|
| Rob Norton | Alderperson - Seventh District | Present | |
| Steve Osness | Alderperson - Fourth District | Present | |
| Steve Hass | Alderperson - Second District | Present | |

Also in attendance: Mayor Derek Woellner, Utility Operations Manager Gabe Steinagel, Public Works Director/City Engineer Rod Akey, Street & Weed Commissioner Ron Liberty, Street Superintendent Dustin Bonack (arr. 5:18), Tyler Torkelson (arr. 5:10) and City Clerk Bill Heideman. A representative from Merrill Productions was present to videotape the meeting.

II. Preliminary Items

1. February Vouchers

Utility Operations Manager Steinagel answered questions related to the vouchers.

Motion (Hass/Osness to approve.

**RESULT: APPROVED**

III. Agenda Items for Consideration

1. Review of the Wastewater Treatment Plants approved WPDES Permit

The permit was in the meeting packet.

Utility Operations Manager Steinagel reported on the permit. Phosphorus levels are acceptable, which will allow for five years of additional planning. This was the only major change in the permit.

No action was taken.

2. Discussion on the need for Water Tower Mixers

No information was in the meeting packet. Public Works Director/City Engineer Akey reported that installing mixers would help prevent freeze-ups.

Motion (Hass/Osness) to refer to the Common Council with no recommendation.

**RESULT: REFERRED TO COUNCIL** **Next: 4/9/2019 7:00 PM**

IV. Monthly Report

1. Operations Report

Attachment: Committee Reports (4073 : Fie committee reports)

The report was distributed at the meeting.

Utility Operations Manager Steinagel reviewed the report.

Alderman Hass reported that he has been contacted by a constituent who was asked to run water continuously recently to prevent a freeze-up. This also resulted in her using considerably more water softener than she would usually use. Consideration of compensation for the water softener and/or water bill adjustment will be an item on the April meeting agenda.

## V. Public Comment Period

None.

## VI. Establish date, time & location of next meeting

Wednesday, April 24th, 2019 at 5:00 P.M. in the City Hall Common Council Chambers.

## VII. Adjournment

Motion (Norton/Hass) to adjourn. Carried. Adjourned at 5:21 P.M.

Attachment: Committee Reports (4073 : Fie committee reports)

# CITY OF MERRILL

**1004 EAST FIRST STREET**
**MERRILL, WI 54452-2586**

AN ORDINANCE: By City Plan and Parks and Recreation Commissions
Re: Amending Chapter 2, Article VI, Section 2-142 – City Plan Commission

ORDINANCE NO. 2019-
Introduced: April 9, 2019
1st Reading:
2nd Reading:
3rd Reading:
Committee/Commission Action:
**RECOMMENDED FOR PASSAGE**

# AN ORDINANCE

The Common Council of the City of Merrill, Wisconsin, does ordain as follows:

**Section 1.** Chapter 2, Article VI, Section 2-142 of the Code of Ordinances for the City of Merrill is amended as follows:

Sec. 2-142. - City Plan Commission.

(a) *Composition.* The plan commission shall consist of the mayor who shall be the presiding officer, one alderperson and four citizens of the city, and a member of the Parks and Recreation Commission, as selected by that Commission. If no Park and Recreation member, who is a resident of the City, is willing to serve, an additional citizen, of the City, shall be appointed by the Mayor. ~~the chairperson of the parks and recreation commission,~~. The city administrator, engineering department representative, city attorney and the community development representative shall attend all commission meetings as ex officio, nonvoting members unless excused by the presiding officer.
(b) *Alderperson.* The alderperson of the plan commission shall be annually elected by a two-thirds vote of the common council at the council's organizational meeting.
(c) *Citizen members.* The four citizen members shall be appointed at the organizational meeting by the mayor, subject to council confirmation, to hold office for a period of three years.
(d) *Officers.* As soon as practical after May 1 of each year, the plan commission shall organize itself and elect a vice-chairperson, and other officers deemed necessary.
(e) *Record.* The plan commission shall keep a written record of its proceedings to include all actions taken, a copy of which shall be filed with the city clerk. Four members shall constitute a quorum but all actions shall require the affirmative approval of a majority of all the members of the commission.

**Section 2.** **Severability.** In the event any section, subsection, clause, phrase or portion of this ordinance is for any reason held illegal, invalid or unconstitutional by any court of competent jurisdiction, such portion shall be deemed a separate, distinct and independent provision, and such holding shall not affect the validity of the remainder of this ordinance. It is the legislative intent of the Common Council that this ordinance would have been adopted if such illegal provision had not been included or any illegal application had not been made.

**Section 3.** **Repeal and Effective Date.** All ordinances or parts of ordinances and resolutions in conflict herewith are hereby repealed. This ordinance shall take effect from and after its passage and publication.

Moved by: _____

Adopted: _____

Approved: _____

Published: _____

Approved:

_____

Derek Woellner, Mayor

Attest:

_____

William N. Heideman, City Clerk

# CITY OF MERRILL

**1004 EAST FIRST STREET**
**MERRILL, WI 54452-2586**

AN ORDINANCE: By City Plan Commission
Re: Amending the District Zoning Map of the City of Merrill, Wisconsin for Lot 3 of Certified Survey Map No. 2572

ORDINANCE NO. 2019-____
Introduced: April 9, 2019
1st Reading: _____
2nd Reading: _____
3rd Reading: _____
Committee/Commission Action:
**RECOMMENDED FOR PASSAGE**

# AN ORDINANCE

The Common Council of the City of Merrill, Wisconsin, does ordain as follows:

**Section 1.** The District Zoning Map of the City of Merrill, Wisconsin is hereby amended by changing the zoning of the following described property in Lot 3 of Certified Survey Map #2572 in the City of Merrill from R-2 (Residential) to Industrial, said parcel more particularly described as follows:

> A part of Assessor's Plat 619 in Government Lot Three (3), now known as Lot 3 of Certified Survey Map #2572, document #0521636, City of Merrill, Lincoln County, Wisconsin.

**Section 2.** **Severability.** In the event any section, subsection, clause, phrase or portion of this ordinance is for any reason held illegal, invalid or unconstitutional by any court of competent jurisdiction, such portion shall be deemed a separate, distinct and independent provision, and such holding shall not affect the validity of the remainder of this ordinance. It is the legislative intent of the Common Council that this ordinance would have been adopted if such illegal provision had not been included or any illegal application had not been made.

**Section 3.** **Repeal and Effective Date.** All ordinances or parts of ordinances and resolutions in conflict herewith are hereby repealed. This ordinance shall take effect from and after its passage and publication.

Approved:

_____
Derek Woellner

Moved by: _____

Adopted: _____

Approved: _____

Published: _____

Attest:

_____
William N. Heideman, City Clerk

Attachment: Ordinance for rezoning on Alexander Street (4070 : Zoning amendment request from C & D Excavating)

# CITY OF MERRILL

1004 EAST FIRST STREET
MERRILL, WI 54452

## NOTICE OF PUBLIC HEARING

All persons interested will be given an opportunity to be heard at a public hearing to be held by and before the City Plan Commission of the City of Merrill, Wisconsin, commencing at **6:00 p.m., on Wednesday, April 3, 2019**, in the City Hall Council Chambers, 1004 East First Street, Merrill, Wisconsin, on the following proposed matter, to wit;

1.) C&D Excavating LLC, requesting the rezoning of vacant parcel on Alexander Street from R-2 to Industrial. Legally described as part of Assessor Plat 619 in GL 3 now known as Lot 3 of Certified Survey Map 2572 D0521636, City of Merrill, Lincoln County, Wisconsin. Parcel #251-3106-152-0264

Anyone having any questions regarding the hearing should contact Zoning Administrator, Darin Pagel at 536-4880.

Dated: March 6, 2019

CITY OF MERRILL, WISCONSIN

By: _____
William N. Heideman
City Clerk

Attachment: 2019-04-03 City Plan Hearing (4070 : Zoning amendment request from C & D Excavating)

# APPLICATION FOR ZONING AMENDMENT
# CITY OF MERRILL

NAME: C+D EXCAVATING STREET ADDRESS: W6976 SUNSET DRIVE MERRILL

PROPERTY ADDRESS: South Alexander TAX ROLL#: 251310615202 64

LEGAL DESCRIPTION: _____

EXISTING USE: R2 PROPOSED USE: Industrial

REASONS FOR REQUESTING A ZONE CHANGE: Tree Farm

## ADDITIONAL REQUIREMENTS

1.) Names and addresses of all abutting and opposite property owners within 300 feet of the property to be altered.
2.) Principal use of all properties within 300 feet of the property to be altered.
3.) A plot plan or survey plat, drawn to scale, showing the property to be rezoned, location of structures, and property lines within 300 feet of the parcel.
4.) Any further information that may be pertinent in considering the application.
5.) FAILURE TO SUPPLY SUCH INFORMATION SHALL BE GROUNDS FOR DISMISSAL OF PETITION.
6.) A fee of $175.00 shall be paid to the Clerk-Treasurer at time of application.

All information submitted is accurate to the best of my knowledge.

Daryl D. Folkbrune 1/25/19

Signature of Applicant Date

Attachment: Zoning Amendment Application - C & D Excavating (4070 : Zoning amendment request from C & D Excavating)

# Lincoln County Public Access Land Records Viewer

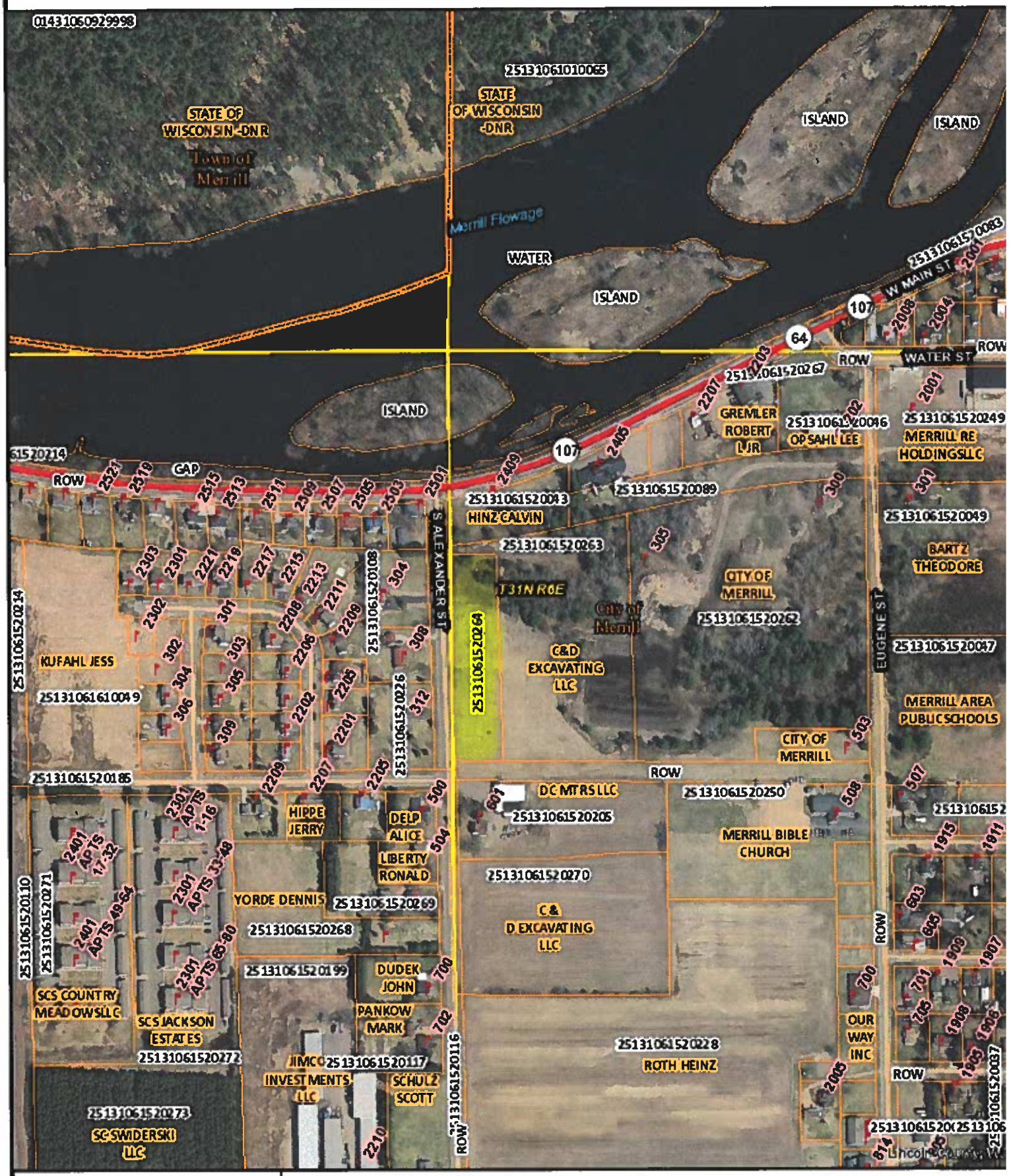


Author: Public
Date Printed: 3/6/2019

The information depicted on this map is a compilation of public record information including aerial photography and other base maps. No warranty is made, express or implied, as to the accuracy of the information used. The data layers are a representation of current data to the best of our knowledge and may contain errors. It is not a legally recorded map and cannot be substituted for field-verified information. Map may be reproduced with permission of the Lincoln County Land Services Department. Errors should be reported to Land Services Department, 801 North Sales St, Merrill, WI, 54452. Copyright © 2015 Phone

Attachment: Zoning Amendment Application - C & D Excavating (4070 : Zoning amendment request from C & D Excavating)